THIS DRAWING IS UNPUBLISHED. RELEASED FOR PUBLICATION -,- .
© COPYRIGHT - BY TYCO ELECTRONICS CORPORATION. ALL RIGHTS RESERVED.

LOC	DIST
FT	0

REVISIONS

P	LTR	DESCRIPTION	DATE	DWN	APVD
	C1	REVISED PER ECO-05-6673	8/5/05	SS	SRY

NOTES:
1. ALL DIMENSIONS ARE IN MMS.
2. BUCHANAN LOGO TO APPEAR ON HOUSING, LOCATION OPTIONAL WHERE SPACE PERMITS.
3. OBSOLETE PART NUMBER.

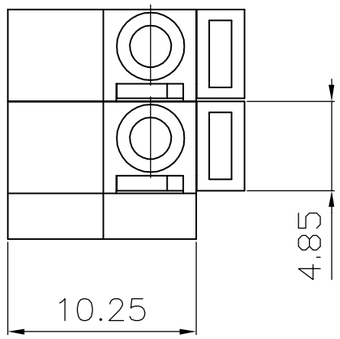

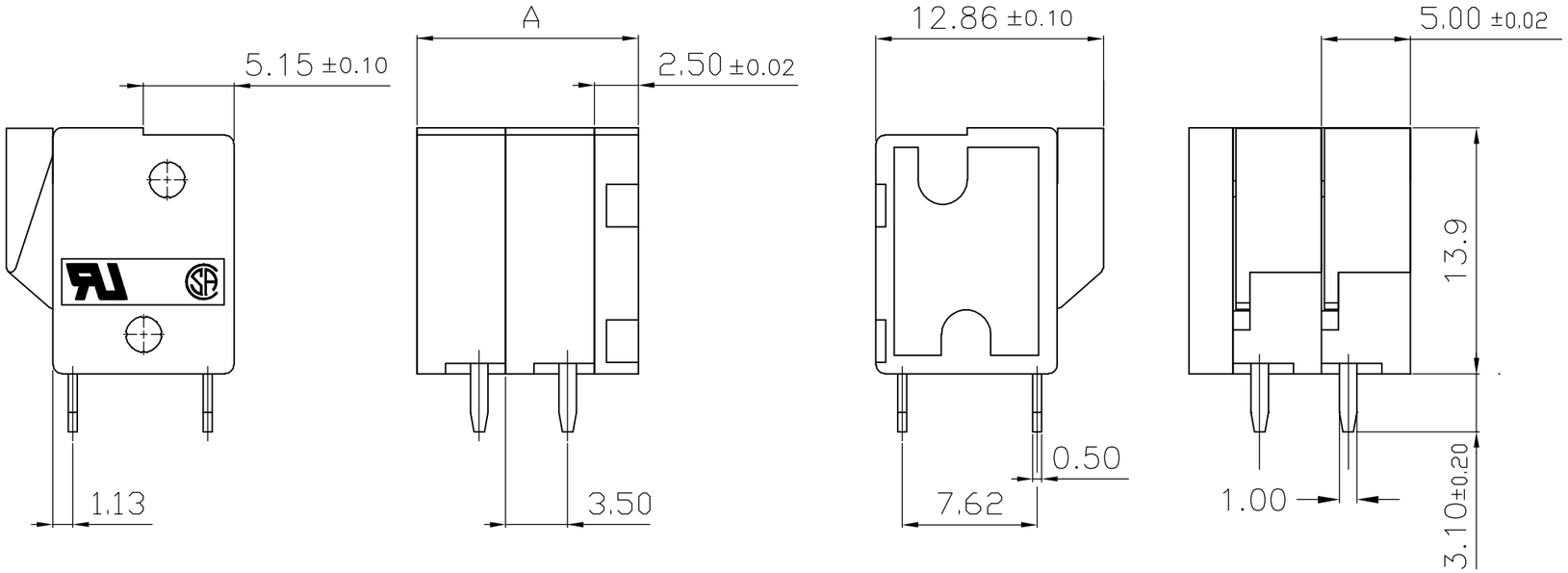

	DIM. A	NO. OF POS.	PART NUMBER
3	122.50	24	2-796460-4
3	117.50	23	2-796460-3
3	112.50	22	2-796460-2
3	107.50	21	2-796460-1
3	102.50	20	2-796460-0
3	97.50	19	1-796460-9
3	92.50	18	1-796460-8
3	87.50	17	1-796460-7
3	82.50	16	1-796460-6
3	77.50	15	1-796460-5
3	72.50	14	1-796460-4
3	67.50	13	1-796460-3
	62.50	12	1-796460-2
	57.50	11	1-796460-1
	52.20	10	1-796460-0
	47.50	9	796460-9
	42.50	8	796460-8
	37.50	7	796460-7
	32.50	6	796460-6
	27.50	5	796460-5
	22.50	4	796460-4
	17.50	3	796460-3
	12.50	2	796460-2

796460-2 AS SHOWN

THIS DRAWING IS A CONTROLLED DOCUMENT.

DIMENSIONS: mm

TOLERANCES UNLESS OTHERWISE SPECIFIED:
0 PLC ± -
1 PLC ± 0.3
2 PLC ± 0.25
3 PLC ± -
4 PLC ± -
ANGLES ± -

MATERIAL -

FINISH -

DWN E. ZANOLINI 29JAN01
CHK E. ZANOLINI 29JAN01
APVD D. BIEVENOUR 29JAN01
PRODUCT SPEC —
APPLICATION SPEC —
WEIGHT —

tyco Electronics
Tyco Electronics Corporation
Harrisburg, Pa 17105-3608

NAME
BOARD MT. SCREWLESS 5.0mm
TOP WIRE ENTRY
TERMINAL BLOCK (LT)

SIZE	CAGE CODE	DRAWING NO	RESTRICTED TO
A3	00779	C-796460	—

CUSTOMER DRAWING | SCALE NTS | SHEET 1 OF 2 | REV C1

THIS DRAWING IS UNPUBLISHED. RELEASED FOR PUBLICATION -,- .
© COPYRIGHT - BY TYCO ELECTRONICS CORPORATION. ALL RIGHTS RESERVED.

LOC	DIST
FT	0

REVISIONS

P	LTR	DESCRIPTION	DATE	DWN	APVD
	—	SEE SHEET 1	-	—	—

1. Application and Features:

1-1. This screwless terminals are suitable for both solid and flexible conductors.

1-2. A spring made of stainless strip steel guarantees for permanent and safe contact.

1-3. The type is operated by pushing a screwdriver on the level. This lever is fully integrated into the body.

1-4. It is equipped with a cover for easy hand adjustment.

2. Technical Data:

2-1. Material:

2-1-1. HOUSING: NYLON FR15, (Without Glass), UL 94 V-0 (Green).

2-1-2. Contact: Brass(Cu Zn)
Ni,Tin plated.
first 50u" (min) Ni plated over all.
last 120u" (min) Tin plated over all.

2-1-3. Metal Plate: Stainless strip steel.

2-2. Electrical:

2-2-1. Current rating: 10 Amp 300VAC.

2-2-2. Dielectric withstanding voltage: 2000VAC (min).

2-2-3. Insulation resistance: 500MΩ more at 500VAC.

2-2-4. Wire Range: 14-22AWG.

2-3. Mechanical:

2-3-1. Wire retention force: 1.2 Kg (min).

2-3-2. Operating temperature: -55°C to +105°C.

2-3-3. Solderability: 95% coverage (min).

THIS DRAWING IS A CONTROLLED DOCUMENT.

DIMENSIONS: mm

TOLERANCES UNLESS OTHERWISE SPECIFIED:
0 PLC ± -
1 PLC ± -
2 PLC ± -
3 PLC ± -
4 PLC ± -
ANGLES ± -

MATERIAL -

FINISH -

DWN E. ZANOLINI 29JAN01
CHK E. ZANOLINI 29JAN01
APVD D. BIEVENOUR 29JAN01
PRODUCT SPEC —
APPLICATION SPEC —
WEIGHT —

tyco Electronics
Tyco Electronics Corporation
Harrisburg, Pa 17105-3608

NAME
TERMINAL BLOCK BOARD MT, SCREWLESS
TOP WIRE ENTRY
5.0mm PITCH (LT)

SIZE	CAGE CODE	DRAWING NO	RESTRICTED TO
A3	00779	C-796460	—

CUSTOMER DRAWING

SCALE	SHEET	REV
NTS	2 OF 2	C1