THIS DRAWING IS UNPUBLISHED. RELEASED FOR PUBLICATION ,19 .
© COPYRIGHT 19 BY AMP INCORPORATED. ALL RIGHTS RESERVED.

LOC	DIST
GP	00

REVISIONS

P	LTR	DESCRIPTION	DATE	DWN	APVD
	S	OBSOLETE –1,–2,–3 0S1D–0014–00	01NOV00	AH	JR

△1 HOUSING–MATERIAL : LIQUID–CRYSTAL–POLYMER, COLOR: NATURAL.

△2 CONTACT–MATERIAL : PHOS. BRONZE.

△3 LATCH–MATERIAL : BRASS, NICKEL PLATE

△4 CONTACT–PLATE: 0.00508[.000200] MIN. TIN/LEAD OVER 0.00127 [.000050] MIN NICKEL.

5. IN ADDITION TO THOSE RECOMMENDED "SIMM" P.C. BOARD DIMENSIONS AND TOLERANCES SHOWN, ALL JEDEC SPECIFICATIONS APPLY AS SHOWN ON MO–116, ISSUE A.

6. RECOMMENDED MATING S.I.M.M. TAB METALLURAGY: BASE METAL–COPPER. PLATING TO BE 0.00762[.000300] MIN TIN/LEAD OVER 0.00127[.000050] MIN NICKEL.

△7 OBSOLETE

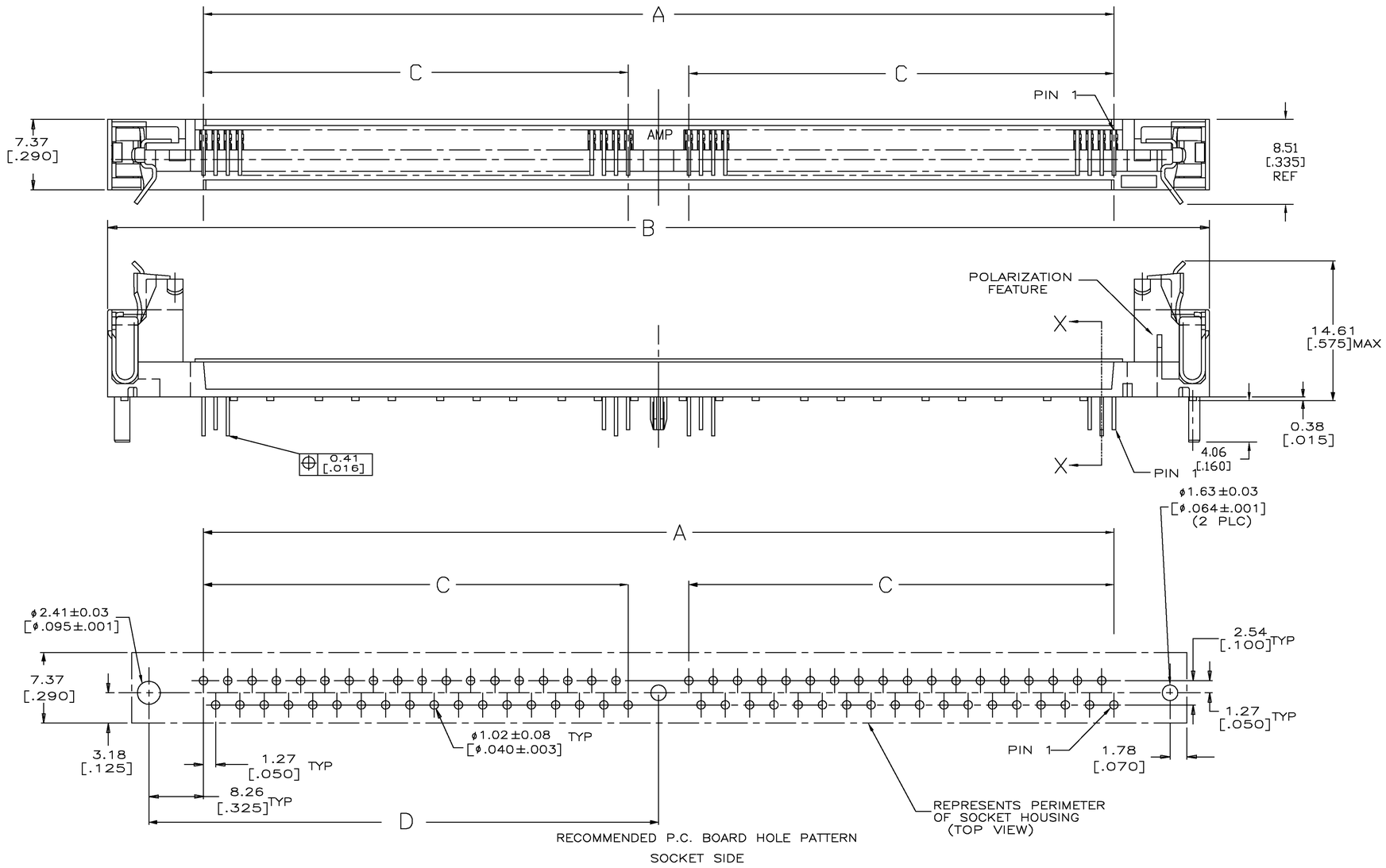

RECOMMENDED P.C. BOARD HOLE PATTERN
SOCKET SIDE

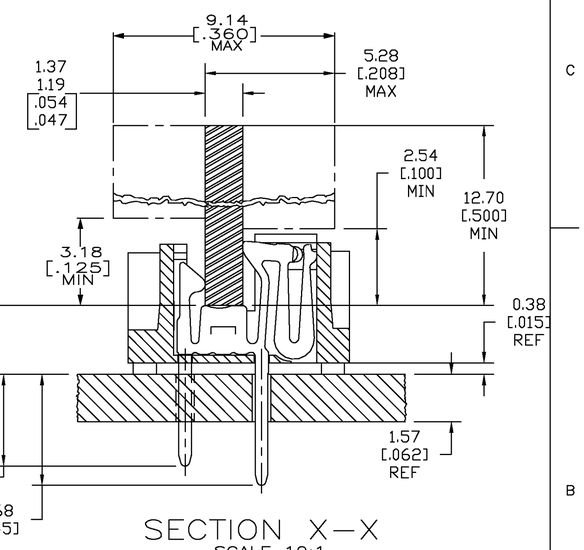

SECTION X–X
SCALE 10:1
(BOARDS SHOWN FOR REF ONLY)

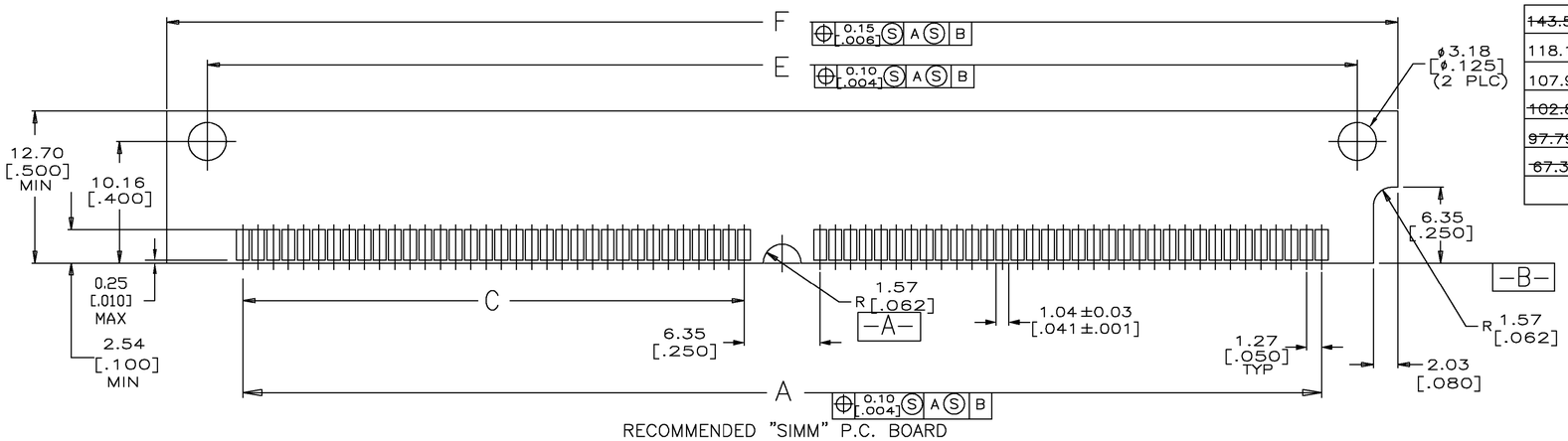

RECOMMENDED "SIMM" P.C. BOARD

~~143.51[5.650]~~	~~136.75[5.384]~~	~~73.66[2.900]~~	~~62.23[2.450]~~	~~151.13[5.950]~~	~~130.81[5.150]~~	~~100~~	△7 822021–6
118.11[4.650]	111.35[4.384]	60.96[2.400]	49.53[1.950]	125.73[4.950]	105.41[4.150]	80	822021–5
107.95[4.250]	101.19[3.984]	55.88[2.200]	44.45[1.750]	115.57[4.550]	95.25[3.750]	72	822021–4
~~102.87[4.050]~~	~~96.11[3.784]~~	~~53.34[2.100]~~	~~41.91[1.650]~~	~~110.49[4.350]~~	~~90.17[3.550]~~	~~68~~	△7 822021–3
~~97.79[3.850]~~	~~91.03[3.584]~~	~~50.80[2.000]~~	~~39.37[1.550]~~	~~105.41[4.150]~~	~~85.09[3.350]~~	~~64~~	△7 822021–2
~~67.31[2.650]~~	~~60.55[2.384]~~	~~35.56[1.400]~~	~~24.13[.950]~~	~~74.93[2.950]~~	~~54.61[2.150]~~	~~40~~	△7 822021–1
F	E	D	C	B	A	NO OF POSN	PART NO

THIS DRAWING IS A CONTROLLED DOCUMENT.

DIMENSIONS: mm [INCHES]

TOLERANCES UNLESS OTHERWISE SPECIFIED:
0 PLC ± –
1 PLC ± –
2 PLC ± 0.13[.005]
3 PLC ± –
4 PLC ± –
ANGLES ± –

MATERIAL △1 △2 △3
FINISH △3 △4

DWN K. SALMON 3–21–91
CHK R. MILLER 3–25–91
APVD J.LAMBERT 3–26–91
PRODUCT SPEC –
APPLICATION SPEC –
WEIGHT –
CUSTOMER DRAWING

AMP Incorporated
Harrisburg PA 17105–3608

NAME
CONNECTOR, MICRO–EDGE, .050, VERT, TIN PL, W/METAL LATCH

SIZE	CAGE CODE	DRAWING NO	RESTRICTED TO
A1	00779	C–822021	–

SCALE 4:1 SHEET 1 OF 1 REV S