Power Relay PK2 (THT – THR)

- **60% volume reduced Power K at increased performance**
- **PCB area requirements minimized by 50% to only 293mm²**
- **Size optimized to lwh (mm) 18.3x16x15.9**
- **Limiting continuous current 40A**
- **Maximum switch on current 200A**
- **Increased ambient temperature 105°C**
- **Design allows highest reliability**
- **High shock and vibration resistance**
- **Wave (THT) and reflow (THR/pin-in-paste) solderable versions**
- **For latching (bistable) version refer to Power Relay PK2 Latching**

Typical applications
ABS control, blower fans, cooling fan, engine control, fuel pump, glow plug, hazard warning signal, switched power supply.

F201Rfcw2b

Contact Data

Contact arrangement	1 form A, 1 NO
Rated voltage	12VDC
Rated current	40A[1)]
Limiting continuous current	
23°C	40A[1)]
85°C	33A[1)]
105°C	22A[1)]
Limiting making current	200A[2)]
Limiting breaking current	40A[2)]
Contact material	$AgSnO_2$
Min. recommended contact load	1A at 5VDC[3)]
Initial voltage drop at 10A, typ./max.	30/300mV
Frequency of operation at nominal load	6 ops./min (0.1Hz)
Operate/release time max.	typ. 3/1.5ms[4)]
Electrical endurance	
at cyclic temperature -40/+23/+85°C	
and 13.5VDC and 120ms (on), 4.88s (off)	
Inductive load: L=0.5mH, 60A (on)/35A (off)	$>1x10^5$ ops.[5)]
resistive load: 40A (on)/40A (off)	$>1x10^5$ ops.[5)]
capacitive load 200A (on)/20A (off)	$>1x10^5$ ops.[5)]

Contact Data (continued)

Mechanical endurance	$>2x10^6$ ops.

1) Measured on 70x70x1.5mm epoxy PCB FR4 with 52cm² (double layer 140µm) copper area.
2) The values apply to a resistive or inductive load with suitable spark suppression and at maximum 13.5VDC for 12VDC load voltages.
3) See chapter Diagnostics of Relays in our Application Notes or consult the internet at http://relays.te.com/appnotes/
4) For unsuppressed relay coil. A low resistive suppression device in parallel to the relay coil increases the release time and reduces the lifetime caused by increased erosion and/or higher risk of contact tack welding (monostable version only).
5) Be aware of using right polarity, see Terminal Assignment. Wrong polarity will reduce endurance.

Coil Data

Rated coil voltage	12VDC

Coil versions, DC coil

Coil code	Rated voltage VDC	Operate voltage VDC	Release voltage VDC	Coil resistance Ω±10%	Rated coil power mW
001/005	12	6.9	1.5	176	818
009	10	5.6	1.3	120	833

All figures are given for coil without pre-energization, at ambient temperature +23°C.
Other coil voltages on request.

Max. DC load breaking capacity

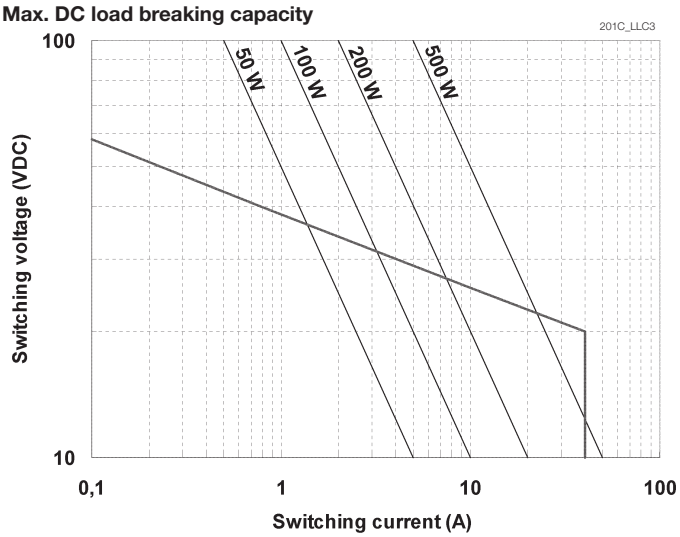

Load limit curve: safe shutdown, no stationary arc/make contact.
Load limit curves measured with low inductive resistors verified for 1000 switching events.

Coil operating range

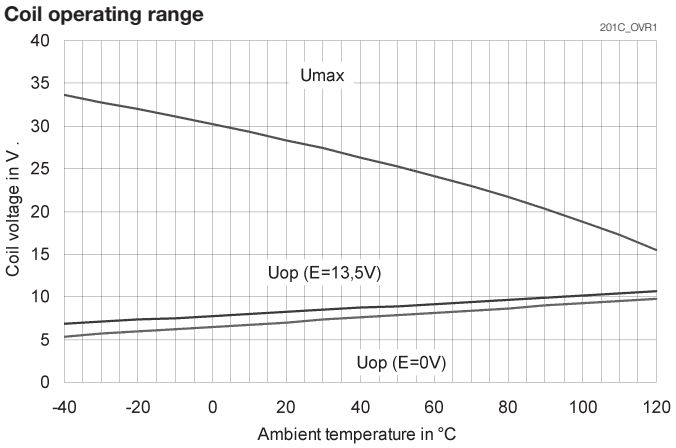

Does not take into account the temperature rise due to the contact current
E = pre-energization.

02-2012, Rev. 0212
www.te.com

Power Relay PK2 (THT – THR) (Continued)

Insulation Data	
Initial dielectric strength	
between contact and coil	500VAC$_{rms}$

Other Data	
EU RoHS/ELV compliance	compliant THT: sealed type washable THR: sealed type vented
Ambient temperature, DC coil	-40 to +105°C[6)]
Cold storage, IEC 60068-2-1	1000h; -40°C
Dry heat, IEC 60068-2-2	1000h; +125°C
Temperature cycling (shock),	
IEC 60068-2-14, Na	1000 cycles, -40/+125°C, dwell time 15min
Category of environmental protection,	
IEC 61810	RT II - flux proof, RT III - immersion cleanable
Sealing test, IEC 60068-2-17	
THT	Qc, method 2, 1min, 70°C
THR	vented
Vibration resistance (functional),	
IEC 68-2-6 (sine pulse form), 30 to 440Hz,	
no change in the switching state >10µs	>20g
Shock resistance (functional),	
IEC 68-2-27 (half sine form single pulses)	
open NO contact will not close >10µs,	6ms >30g
closed NO contact will not open >10µs	11ms >100g
Terminal type	PCB THT, PCB THR
Weight	approx. 11g (0.39oz)
Solderability (aging 3: 4h/155°C)	
IEC 60068-2-20, THT	Ta, method 1, hot dip 5s, 215°C
IEC 60068-2-58, THR	Ta, method 1, hot dip 5s, 245°C
Resistance to soldering heat THT	
IEC 60068-2-20	Tb, method 1A hot dip 10s, 260°C with thermal screen
Resistance to soldering heat THR	
IEC 60068-2-58	Tb, method 1A hot dip 10s, 260°C preheating min.130°C
Washing	THT version
Storage conditions	according to IEC 600688[7)]
Packaging unit	600 pcs.

6) See graph: coil operating range.
7) For general storage and processing recommendations please refer to our Application Notes and especially to Storage in the Definitions or at http://relays.te.com/appnotes/

Terminal Assignment
Bottom view on solder pins

1 form A, 1 NO

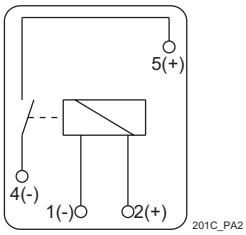

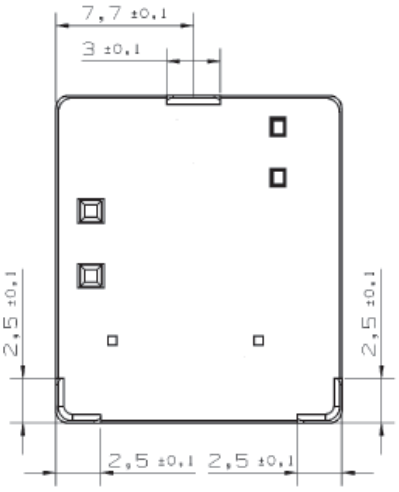

Dimensions

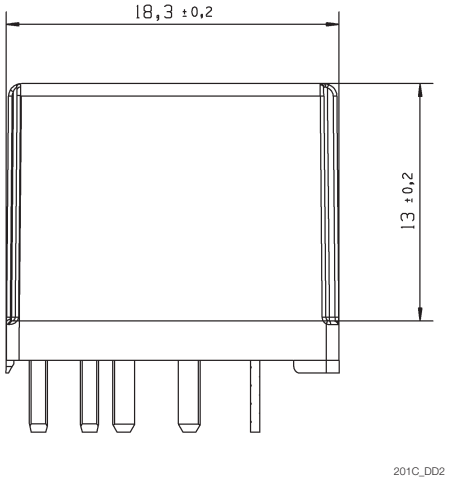

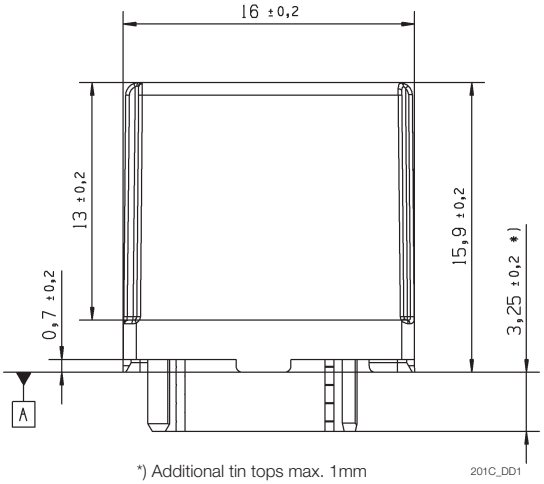

*) Additional tin tops max. 1mm

Power Relay PK2 (THT – THR) (Continued)

PCB Layout
Bottom view on solder pins

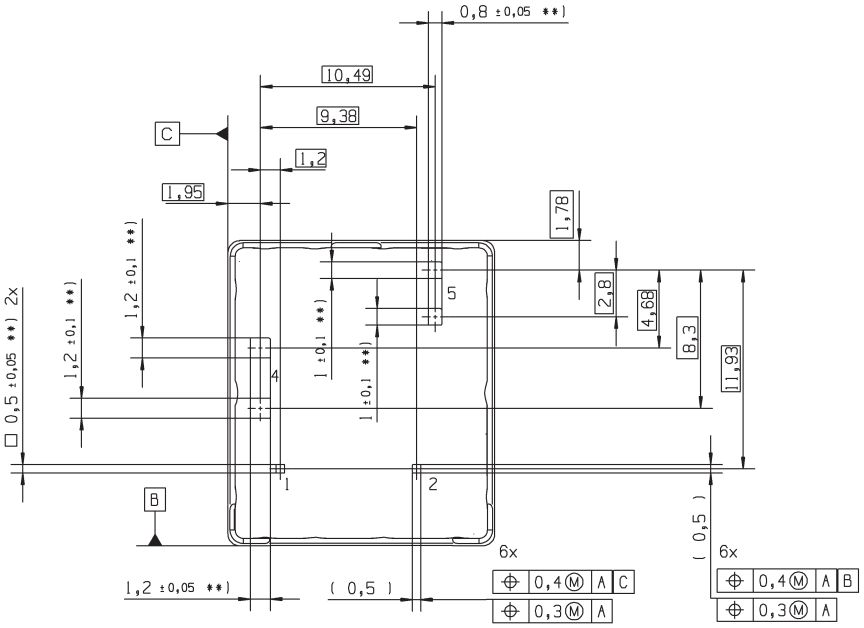

Remark: Positional tolerances according to DIN EN ISO 5458
**) without tinning (hot dip)

Product code structure

Typical product code **V23201 -C/R 1 001 -A 5 02**

Type						
	PK2	Power Relay PK2 (THT - THR)				
Terminals and enclosure						
	C	Sealed	**R**	Reflow vented		
Design						
	1	Single relay				
Coil						
	001	Standard (THT)	**005**	Reflow (THR)	**009**	Reflow, sensitive THR
Contact type						
	A	Single contact				
Contact material						
	5	$AgSn0_2$				
Contact arrangement						
	02	1 form A, 1 NO				

Product code	Terminal/Encl.	Design	Coil	Contact type	Cont. material	Arrangement	Part number
V23201-C1001-A502	PCB, sealed	Single relay	Standard (THT)	Single	$AgSnO_2$	1 form A, 1 NO	5-1414782-7
V23201-R1005-A502	PCB, vented		Reflow (THR)				6-1414932-3
V23201-R1009-A502			Ref., sens. (THR)				4-1414989-5