ISL31490E, ISL31491E, ISL31492E, ISL31493E, ISL31495E, ISL31496E, ISL31498E

FN7637
Rev 3.00
May 13, 2015

The ISL31490E, ISL31491E, ISL31492E, ISL31493E, ISL31495E, ISL31496E, ISL31498E are fault protected, 5V powered, differential transceivers that exceed the RS-485 and RS-422 standards for balanced communication. The RS-485 transceiver pins (driver outputs and receiver inputs) are protected against faults up to ±60V. Additionally, the extended common mode range allows these transceivers to operate in environments with common mode voltages up to ±25V (>2x the RS-485 requirement), making this RS-485 family one of the most robust on the market.

Transmitters deliver an exceptional 2.5V (typical) differential output voltage into the RS-485 specified 54Ω load. This yields better noise immunity than standard RS-485 ICs, or allows up to six 120Ω terminations in star network topologies.

Receiver (Rx) inputs feature a “Full Fail-safe” design, which ensures a logic high Rx output if Rx inputs are floating, shorted, or on a terminated but undriven (idle) bus. Rx outputs have high drive levels - typically 15mA at V_{OL} = 1V (for opto-coupled, isolated applications).

Half duplex (Rx inputs and Tx outputs multiplexed together) and full duplex pinouts are available. See Table 1 on page 3 for key features and configurations by device number.

For fault protected or wide common mode range devices with cable invert (polarity reversal) please see the ISL32485E datasheet.

Features

- Fault protected RS-485 bus pins . . . . . up to ±60V
- Extended common mode range. . . . . ±25V
  More than twice the range required for RS-485
- 1/4 unit load for up to 128 devices on the bus
- High transient overvoltage tolerance. . . . . ±80V
- Full fail-safe (open, short, terminated) RS-485 receivers
- High Rx I_{OL} for opto-couplers in isolated designs
- Hot plug circuitry - Tx and Rx outputs remain three-state during power-up/power-down
- Choice of RS-485 data rates. . . . . 250kbps to 15Mbps
- Low quiescent supply current. 2.3mA
- Ultra low shutdown supply current. 10µA
- Pb-free (RoHS compliant)

Applications

- Utility meters/automated meter reading systems
- High node count systems
- PROFIBUS™ and field bus networks, and factory automation
- Security camera networks
- Building lighting and environmental control systems
- Industrial/process control networks

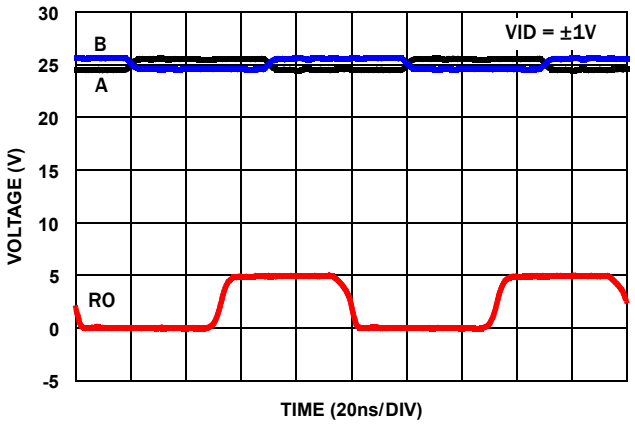

FIGURE 1. EXCEPTIONAL Rx OPERATES AT >15Mbps EVEN WITH A ±25V COMMON MODE VOLTAGE

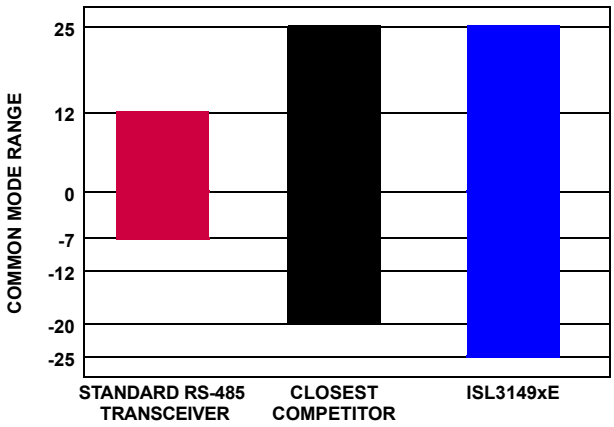

FIGURE 2. ISL3149XE DELIVERS SUPERIOR COMMON MODE RANGE vs STANDARD RS-485 DEVICES

Table of Contents

Ordering Information 3
Pin Configurations 4
Pin Descriptions 4
Truth Tables 5
Typical Operating Circuits 6
Absolute Maximum Ratings 7
Thermal Information 7
Recommended Operating Conditions 7
Electrical Specifications 7
Test Circuits and Waveforms 12
Application Information 14
Receiver (Rx) Features 14
Driver (Tx) Features 14
High Overvoltage (Fault) Protection Increases Ruggedness 14
Widest Common Mode Voltage (CMV) Tolerance Improves Operating Range 14
High VOD Improves Noise Immunity and Flexibility 14
Hot Plug Function 15
Data Rate, Cables and Terminations 15
Built-in Driver Overload Protection 15
Low Power Shutdown Mode 15
Typical Performance Curves 16
Die Characteristics 19
Revision History 19
About Intersil 19
Package Outline Drawing 20
M8.118 20
M10.118 21
L8.3x3K 22
L10.3x3A 23
M14.15 24
E8.3 (JEDEC MS-001-BA ISSUE D) 25
M8.15 26

TABLE 1. SUMMARY OF FEATURES

PART NUMBER	HALF/FULL DUPLEX	DATA RATE (Mbps)	SLEW-RATE LIMITED?	EN PINS?	HOT PLUG?	QUIESCENT I_{CC} (mA)	LOW POWER SHDN?	PIN COUNT
ISL31490E	Full	0.25	Yes	Yes	Yes	2.3	Yes	10, 14
ISL31491E	Full	0.25	Yes	No	Yes	2.3	No	8
ISL31492E	Half	0.25	Yes	Yes	Yes	2.3	Yes	8
ISL31493E	Full	1	Yes	Yes	Yes	2.3	Yes	10, 14
ISL31495E	Half	1	Yes	Yes	Yes	2.3	Yes	8
ISL31496E	Full	15	No	Yes	Yes	2.3	Yes	10, 14
ISL31498E	Half	15	No	Yes	Yes	2.3	Yes	8

Ordering Information

PART NUMBER (Notes 3, 4)	PART MARKING	TEMP. RANGE (°C)	PACKAGE (RoHS Compliant)	PKG. DWG. #
ISL31490EIBZ (Note 1)	ISL31490 EIBZ	-40 to +85	14 Ld SOIC	M14.15
ISL31490EIUZ (Note 1)	1490E	-40 to +85	10 Ld MSOP	M10.118
ISL31490EIRTZ (Note 1)	490E	-40 to +85	10 Ld TDFN	L10.3x3A
ISL31491EIBZ (Note 1)	31491 EIBZ	-40 to +85	8 Ld SOIC	M8.15
ISL31492EIBZ (Note 1)	31492 EIBZ	-40 to +85	8 Ld SOIC	M8.15
ISL31492EIUZ (Note 1)	1492E	-40 to +85	8 Ld MSOP	M8.118
ISL31492EIPZ (Note 2)	31492 EIPZ	-40 to +85	8 Ld PDIP	E8.3
ISL31492EIRTZ (Note 1)	492E	-40 to +85	8 Ld TDFN	L8.3x3K
ISL31493EIBZ (Note 1)	ISL31493 EIBZ	-40 to +85	14 Ld SOIC	M14.15
ISL31493EIUZ (Note 1)	1493E	-40 to +85	10 Ld MSOP	M10.118
ISL31495EIBZ (Note 1)	31495 EIBZ	-40 to +85	8 Ld SOIC	M8.15
ISL31495EIUZ (Note 1)	1495E	-40 to +85	8 Ld MSOP	M8.118
ISL31496EIBZ (Note 1)	ISL31496 EIBZ	-40 to +85	14 Ld SOIC	M14.15
ISL31496EIUZ (Note 1)	1496E	-40 to +85	10 Ld MSOP	M10.118
ISL31498EIBZ (Note 1)	31498 EIBZ	-40 to +85	8 Ld SOIC	M8.15
ISL31498EIUZ (Note 1)	1498E	-40 to +85	8 Ld MSOP	M8.118

NOTES:

1. Add "-T*" suffix for tape and reel. Please refer to TB347 for details on reel specifications.
2. Pb-free PDIPs can be used for through-hole wave solder processing only. They are not intended for use in Reflow solder processing applications.
3. These Intersil Pb-free plastic packaged products employ special Pb-free material sets, molding compounds/die attach materials, and 100% matte tin plate plus anneal (e3 termination finish, which is RoHS compliant and compatible with both SnPb and Pb-free soldering operations). Intersil Pb-free products are MSL classified at Pb-free peak reflow temperatures that meet or exceed the Pb-free requirements of IPC/JEDEC J STD-020.
4. For Moisture Sensitivity Level (MSL), please see device information pages for ISL31490E, ISL31491E, ISL31492E, ISL31493E, ISL31495E, ISL31496E, ISL31498E. For more information on MSL please see techbrief TB363.

Pin Configurations

ISL31492E, ISL31495E, ISL31498E
(8 LD MSOP, 8 LD SOIC,
8 LD PDIP, 8 LD TDFN)
TOP VIEW

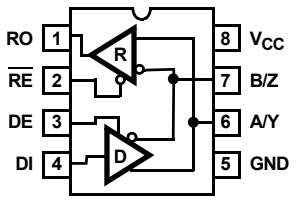

ISL31490E, ISL31493E, ISL31496E
(10 LD MSOP, 10 LD TDFN)
TOP VIEW

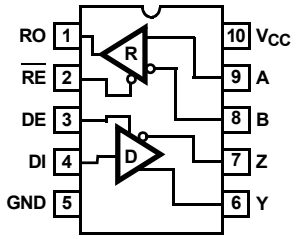

ISL31490E, ISL31493E, ISL31496E
(14 LD SOIC)
TOP VIEW

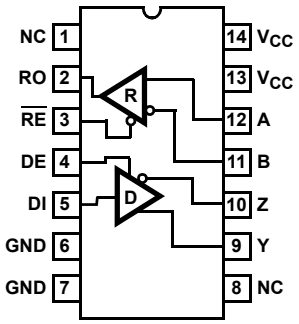

ISL31491E
(8 LD SOIC)
TOP VIEW

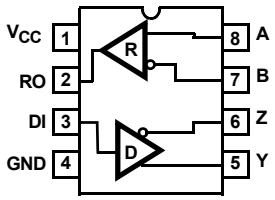

NOTE: Evaluate creepage and clearance requirements at your maximum fault voltage before using small pitch packages (e.g., MSOP and TDFN).

Pin Descriptions

PIN NAME	8 LD PIN # (EXCEPT ISL31491E)	8 LD PIN # (ISL31491E ONLY)	10 LD PIN #	14 LD PIN #	FUNCTION
RO	1	2	1	2	Receiver output: If A-B ≥ -10mV, RO is high; If A-B ≤ -200mV, RO is low; RO = High if A and B are unconnected (floating), shorted together, or connected to an undriven, terminated bus.
$\overline{RE}$	2	-	2	3	Receiver output enable. RO is enabled when $\overline{RE}$ is low; RO is high impedance when $\overline{RE}$ is high. Internally pulled low.
DE	3	-	3	4	Driver output enable. The driver outputs, Y and Z, are enabled by bringing DE high. They are high impedance when DE is low. Internally pulled high.
DI	4	3	4	5	Driver input. A low on DI forces output Y low and output Z high. Similarly, a high on DI forces output Y high and output Z low.
GND	5	4	5	6, 7	Ground connection. This is also the potential of the TDFN EPAD.
A/Y	6	-	-	-	±60V Fault Protected RS-485/RS-422 level, non-inverting receiver input and non-inverting driver output. Pin is an input if DE = 0; pin is an output if DE = 1.
B/Z	7	-	-	-	±60V Fault Protected RS-485/RS-422 level, inverting receiver input and inverting driver output. Pin is an input if DE = 0; pin is an output if DE = 1.
A	-	8	9	12	±60V Fault Protected RS-485/RS-422 level, non-inverting receiver input.
B	-	7	8	11	±60V Fault Protected RS-485/RS-422 level, inverting receiver input.
Y	-	5	6	9	±60V Fault Protected RS-485/RS-422 level, non-inverting driver output.
Z	-	6	7	10	±60V Fault Protected RS-485/RS-422 level, inverting driver output.
V_{CC}	8	1	10	13, 14	System power supply input (4.5V to 5.5V).
PD	-	-	TDFN ONLY	-	TDFN exposed thermal pad (EPAD). Connect to GND.
NC	-	-	-	1, 8	No Internal Connection.

Truth Tables

TRANSMITTING				
INPUTS			OUTPUTS	
$\overline{RE}$	DE	DI	Z	Y
X	1	1	0	1
X	1	0	1	0
0	0	X	High-Z	High-Z
1	0	X	High-Z*	High-Z*

NOTE: *Low Power Shutdown Mode (see Note 15 on page 11), except for ISL31491E.

RECEIVING				
INPUTS				OUTPUT
$\overline{RE}$	DE Half Duplex	DE Full Duplex	A-B	RO
0	0	X	≥ -0.01V	1
0	0	X	≤ -0.2V	0
0	0	X	Inputs Open/Shorted	1
1	0	0	X	High-Z*
1	1	1	X	High-Z

NOTE: *Low Power Shutdown Mode (see Note 15 on page 11), except for ISL31491E.

Typical Operating Circuits

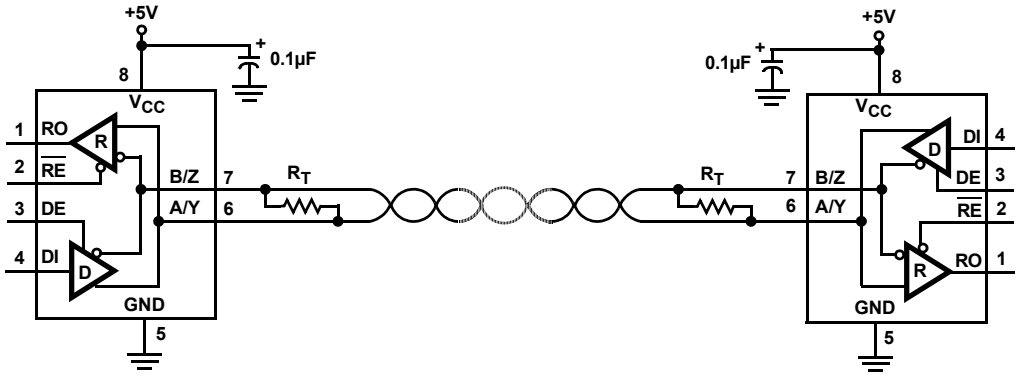

FIGURE 3. ISL31492E, ISL31495E, ISL31498E

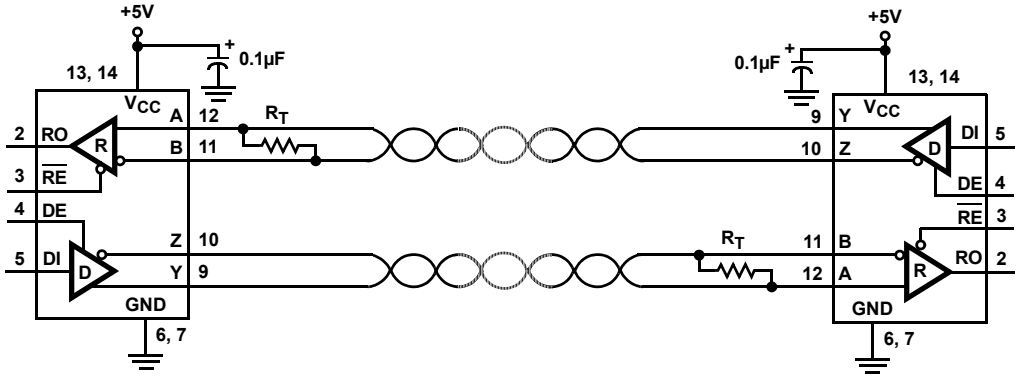

FIGURE 4. ISL31490E, ISL31493E, ISL31496E (SOIC PIN NUMBERS SHOWN)

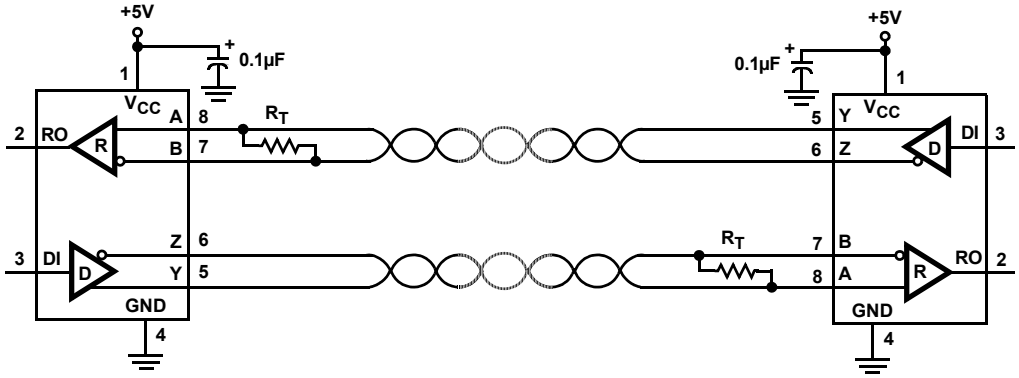

FIGURE 5. ISL31491E

Absolute Maximum Ratings

V_{CC} to Ground 7V
Input Voltages
DI, DE, $\overline{RE}$. . . . . -0.3V to (V_{CC} + 0.3V)
Input/Output Voltages
A/Y, B/Z, A, B, Y, Z . . . . . ±60V
A/Y, B/Z, A, B, Y, Z (Transient pulse through 100Ω), (Note 19) . . . . . ±80V
RO . . . . . -0.3V to (V_{CC} +0.3V)
Short Circuit Duration
Y, Z . . . . . Indefinite
ESD Rating . . . . . See "ESD PERFORMANCE" on page 8.
Latch-up (Tested per JESD78, Level 2, Class A) . . . . . +125°C

Recommended Operating Conditions

Supply Voltage (V_{CC}). 5V
Temperature Range . . . . . -40°C to +85°C
Bus Pin Common Mode Voltage Range. . . . . -25V to +25V

Thermal Information

Thermal Resistance (Typical)	θ_{JA} (°C/W)	θ_{JC} (°C/W)
8 Ld MSOP Package (Notes 5, 8)	140	40
8 Ld PDIP* Package (Notes 6, 8)	105	60
8 Ld SOIC Package (Notes 5, 8)	116	47
8 Ld TDFN Package (Notes 7, 9)	50	5
10 Ld MSOP Package (Notes 5, 8)	135	50
10 Ld TDFN Package (Notes 7, 9)	58	7
14 Ld SOIC Package (Notes 5, 8)	88	39

Maximum Junction Temperature (Plastic Package) . . . . . +150°C
Maximum Storage Temperature Range . . . . . -65°C to +150°C
Pb-Free Reflow Profile . . . . . see TB493
*Pb-free PDIPs can be used for through-hole wave solder processing only. They are not intended for use in Reflow solder processing applications.

CAUTION: Do not operate at or near the maximum ratings listed for extended periods of time. Exposure to such conditions may adversely impact product reliability and result in failures not covered by warranty.

NOTES:

5. θ_{JA} is measured with the component mounted on a high effective thermal conductivity test board in free air. See Tech Brief TB379 for details.
6. θ_{JA} is measured with the component mounted on a low effective thermal conductivity test board in free air.
7. θ_{JA} is measured in free air with the component mounted on a high effective thermal conductivity test board with "direct attach" features. See Tech Brief TB379 for details.
8. For θ_{JC}, the "case temp" location is taken at the package top center.
9. For θ_{JC}, the "case temp" location is the center of the exposed metal pad on the package underside.

Electrical Specifications

Test Conditions: V_{CC} = 4.5V to 5.5V; Unless Otherwise Specified. Typicals are at V_{CC} = 5V, T_A = +25°C (Note 10). **Boldface limits apply across the operating temperature range, -40°C to +85°C.**

PARAMETER	SYMBOL	TEST CONDITIONS	TEMP (°C)	MIN (Note 18)	TYP	MAX (Note 18)	UNITS
DC CHARACTERISTICS							
Driver Differential V_{OUT} (No load)	V_{OD1}		Full	-	-	**V_{CC}**	V
Driver Differential V_{OUT} (Loaded, Figure 6A)	V_{OD2}	R_L = 100Ω (RS-422)	Full	**2.4**	3.2	-	V
		R_L = 54Ω (RS-485)	Full	**1.5**	2.5	**V_{CC}**	V
		R_L = 54Ω (PROFIBUS, V_{CC} ≥ 5V)	Full	**2.0**	2.5	**-**	
		R_L = 21Ω (Six 120Ω terminations for Star Configurations, V_{CC} ≥ 4.75V)	Full	**0.8**	1.3	-	V
Change in Magnitude of Driver Differential V_{OUT} for Complementary Output States	ΔV_{OD}	R_L = 54Ω or 100Ω (Figure 6A)	Full	-	-	**0.2**	V
Driver Differential V_{OUT} with Common Mode Load (Figure 6B)	V_{OD3}	R_L = 60Ω, -7V ≤ V_{CM} ≤ 12V	Full	**1.5**	2.1	**V_{CC}**	V
		R_L = 60Ω, -25V ≤ V_{CM} ≤ 25V (V_{CC} ≥ 4.75V)	Full	**1.7**	2.3	**-**	V
		R_L = 21Ω, -15V ≤ V_{CM} ≤ 15V (V_{CC} ≥ 4.75V)	Full	**0.8**	1.1	-	V
Driver Common-Mode V_{OUT} (Figure 6)	V_{OC}	R_L = 54Ω or 100Ω	Full	**-1**	-	**3**	V
		R_L = 60Ω or 100Ω, -20V ≤ V_{CM} ≤ 20V	Full	**-2.5**	-	**5**	V
Change in Magnitude of Driver Common Mode V_{OUT} for Complementary Output States	ΔV_{OC}	R_L = 54Ω or 100Ω (Figure 6A)	Full	-	-	**0.2**	V

Electrical Specifications Test Conditions: V_{CC} = 4.5V to 5.5V; Unless Otherwise Specified. Typicals are at V_{CC} = 5V, T_A = +25°C (Note 10). **Boldface limits apply across the operating temperature range, -40°C to +85°C. (Continued)**

PARAMETER	SYMBOL	TEST CONDITIONS		TEMP (°C)	MIN (Note 18)	TYP	MAX (Note 18)	UNITS
Driver Short-circuit Current	I_{OSD}	DE = V_{CC}, -25V ≤ V_O ≤ 25V (Note 12)		Full	**-250**	-	**250**	mA
	I_{OSD1}	At first fold-back, 22V ≤ V_O ≤ -22V		Full	**-83**	-	**83**	mA
	I_{OSD2}	At second fold-back, 35V ≤ V_O ≤ -35V		Full	**-13**	-	**13**	mA
Logic Input High Voltage	V_{IH}	DE, DI, $\overline{RE}$		Full	**2.5**	-	-	V
Logic Input Low Voltage	V_{IL}	DE, DI, $\overline{RE}$		Full	-	-	**0.8**	V
Logic Input Current	I_{IN1}	DI		Full	**-1**	-	**1**	µA
		DE, $\overline{RE}$		Full	**-15**	6	**15**	µA
Input/Output Current (A/Y, B/Z)	I_{IN2}	DE = 0V, V_{CC} = 0V or 5.5V	V_{IN} = 12V	Full	-	110	**250**	µA
			V_{IN} = -7V	Full	**-200**	-75	-	µA
			V_{IN} = ±25V	Full	**-800**	±240	**800**	µA
			V_{IN} = ±60V (Note 21)	Full	**-6**	±0.5	**6**	mA
Input Current (A, B) (Full Duplex Versions Only)	I_{IN3}	V_{CC} = 0V or 5.5V	V_{IN} = 12V	Full	-	90	**125**	µA
			V_{IN} = -7V	Full	**-100**	-70	-	µA
			V_{IN} = ±25V	Full	**-500**	±200	**500**	µA
			V_{IN} = ±60V (Note 21)	Full	**-3**	±0.4	**3**	mA
Output Leakage Current (Y, Z) (Full Duplex Versions Only)	I_{OZD}	$\overline{RE}$ = 0V, DE = 0V, V_{CC} = 0V or 5.5V	V_{IN} = 12V	Full	-	20	**200**	µA
			V_{IN} = -7V	Full	**-100**	-5	-	µA
			V_{IN} = ±25V	Full	**-500**	±40	**500**	µA
			V_{IN} = ±60V (Note 21)	Full	**-3**	±0.1	**3**	mA
Receiver Differential Threshold Voltage	V_{TH}	-25V ≤ V_{CM} ≤ 25V		Full	**-200**	-100	**-10**	mV
Receiver Input Hysteresis	ΔV_{TH}	-25V ≤ V_{CM} ≤ 25V		+25	-	25	-	mV
Receiver Output High Voltage	V_{OH}	I_O = -2mA, V_{ID} = -10mV		Full	**V_{CC} - 0.5**	4.75	-	V
		I_O = -8mA, V_{ID} = -10mV		Full	**2.8**	4.2	-	V
Receiver Output Low Voltage	V_{OL}	I_O = 6mA, V_{ID} = -200mV		Full	-	0.27	**0.4**	V
Receiver Output Low Current	I_{OL}	V_O = 1V, V_{ID} = -200mV		Full	**15**	22	-	mA
Three-State (High Impedance) Receiver Output Current	I_{OZR}	0V ≤ V_O ≤ V_{CC}		Full	**-1**	0.01	**1**	µA
Receiver Short-circuit Current	I_{OSR}	0V ≤ V_O ≤ V_{CC}		Full	**±12**	-	**±110**	mA
SUPPLY CURRENT								
No-load Supply Current (Note 11)	I_{CC}	DE = V_{CC}, $\overline{RE}$ = 0V or V_{CC}, DI = 0V or V_{CC}		Full	-	2.3	**4.5**	mA
Shutdown Supply Current	I_{SHDN}	DE = 0V, $\overline{RE}$ = V_{CC}, DI = 0V or V_{CC}		Full	-	10	**50**	µA
ESD PERFORMANCE								
All Pins		Human Body Model (Tested per JESD22-A114E)		+25	-	±2	-	kV
		Machine Model (Tested per JESD22-A115-A)		+25	-	±700	-	V

Electrical Specifications Test Conditions: V_{CC} = 4.5V to 5.5V; Unless Otherwise Specified. Typicals are at V_{CC} = 5V, T_A = +25°C (Note 10). **Boldface limits apply across the operating temperature range, -40°C to +85°C. (Continued)**

PARAMETER	SYMBOL	TEST CONDITIONS		TEMP (°C)	MIN (Note 18)	TYP	MAX (Note 18)	UNITS
DRIVER SWITCHING CHARACTERISTICS (250kbps Versions; ISL31490E through ISL31492E)								
Driver Differential Output Delay	t_{PLH}, t_{PHL}	R_D = 54Ω, C_D = 50pF (Figure 7)	No CM Load	Full	-	320	**450**	ns
			-25V ≤ V_{CM} ≤ 25V	Full	-	-	**1000**	ns
Driver Differential Output Skew	t_{SKEW}	R_D = 54Ω, C_D = 50pF (Figure 7)	No CM Load	Full	-	6	**30**	ns
			-25V ≤ V_{CM} ≤ 25V	Full	1-	-	**50**	ns
Driver Differential Rise or Fall Time	t_R, t_F	R_D = 54Ω, C_D = 50pF (Figure 7)	No CM Load	Full	**400**	650	**1200**	ns
			-25V ≤ V_{CM} ≤ 25V	Full	**300**	-	**1350**	ns
Maximum Data Rate	f_{MAX}	C_D = 820pF (Figure 9)		Full	**0.25**	1.5	**-**	Mbps
Driver Enable to Output High	t_{ZH}	SW = GND (Figure 8), (Notes 13, 20)		Full	-	-	**1200**	ns
Driver Enable to Output Low	t_{ZL}	SW = V_{CC} (Figure 8), (Notes 13, 20)		Full	-	-	**1200**	ns
Driver Disable from Output Low	t_{LZ}	SW = V_{CC} (Figure 8) (Note 20)		Full	-	-	**120**	ns
Driver Disable from Output High	t_{HZ}	SW = GND (Figure 8) (Note 20)		Full	-	-	**1201**	ns
Time to Shutdown	t_{SHDN}	(Note 15)		Full	**60**	160	**600**	ns
Driver Enable from Shutdown to Output High	$t_{ZH(SHDN)}$	SW = GND (Figure 8), (Notes 15, 16)		Full	-	-	**2500**	ns
Driver Enable from Shutdown to Output Low	$t_{ZL(SHDN)}$	SW = V_{CC} (Figure 8), (Notes 15, 16)		Full	-	-	**2500**	ns
DRIVER SWITCHING CHARACTERISTICS (1Mbps Versions; ISL31493E, ISL31495E)								
Driver Differential Output Delay	t_{PLH}, t_{PHL}	R_D = 54Ω, C_D = 50pF (Figure 7)	No CM Load	Full	-	70	**125**	ns
			-25V ≤ V_{CM} ≤ 25V	Full	-	-	**350**	ns
Driver Differential Output Skew	t_{SKEW}	R_D = 54Ω, C_D = 50pF (Figure 7)	No CM Load	Full	-	3	**15**	ns
			-25V ≤ V_{CM} ≤ 25V (Note 22)	Full	-	-	**25**	ns
Driver Differential Rise or Fall Time	t_R, t_F	R_D = 54Ω, C_D = 50pF (Figure 7)	No CM Load	Full	**70**	230	**300**	ns
			-25V ≤ V_{CM} ≤ 25V	Full	**70**	-	**550**	ns
Maximum Data Rate	f_{MAX}	C_D = 820pF (Figure 9)		Full	**1**	4	**-**	Mbps
Driver Enable to Output High	t_{ZH}	SW = GND (Figure 8), (Note 13)		Full	-	-	**350**	ns
Driver Enable to Output Low	t_{ZL}	SW = V_{CC} (Figure 8), (Note 13)		Full	-	-	**300**	ns
Driver Disable from Output Low	t_{LZ}	SW = V_{CC} (Figure 8)		Full	-	-	**120**	ns
Driver Disable from Output High	t_{HZ}	SW = GND (Figure 8)		Full	-	-	**120**	ns
Time to Shutdown	t_{SHDN}	(Note 15)		Full	**60**	160	**600**	ns
Driver Enable from Shutdown to Output High	$t_{ZH(SHDN)}$	SW = GND (Figure 8), (Notes 15, 16)		Full	-	-	**2000**	ns
Driver Enable from Shutdown to Output Low	$t_{ZL(SHDN)}$	SW = V_{CC} (Figure 8), (Notes 15, 16)		Full	-	-	**2000**	ns
DRIVER SWITCHING CHARACTERISTICS (15Mbps Versions; ISL31496E, ISL31498E)								
Driver Differential Output Delay	t_{PLH}, t_{PHL}	R_D = 54Ω, C_D = 50pF (Figure 7)	No CM Load	Full	-	21	**45**	ns
			-25V ≤ V_{CM} ≤ 25V	Full	-	-	**80**	ns
Driver Differential Output Skew	t_{SKEW}	R_D = 54Ω, C_D = 50pF (Figure 7)	No CM Load	Full	-	3	**6**	ns
			-25V ≤ V_{CM} ≤ 25V	Full	-	-	**7**	ns

Electrical Specifications Test Conditions: V_{CC} = 4.5V to 5.5V; Unless Otherwise Specified. Typicals are at V_{CC} = 5V, T_A = +25°C (Note 10). **Boldface limits apply across the operating temperature range, -40°C to +85°C. (Continued)**

PARAMETER	SYMBOL	TEST CONDITIONS		TEMP (°C)	MIN (Note 18)	TYP	MAX (Note 18)	UNITS
Driver Differential Rise or Fall Time	t_R, t_F	R_D = 54Ω, C_D = 50pF (Figure 7)	No CM Load	Full	**5**	17	**30**	ns
			-25V ≤ V_{CM} ≤ 25V	Full	**5**	-	**30**	ns
Maximum Data Rate	f_{MAX}	C_D = 470pF (Figure 9)		Full	**15**	25	**-**	Mbps
Driver Enable to Output High	t_{ZH}	SW = GND (Figure 8), (Note 13)		Full	-	-	**100**	ns
Driver Enable to Output Low	t_{ZL}	SW = V_{CC} (Figure 8), (Note 13)		Full	-	-	**100**	ns
Driver Disable from Output Low	t_{LZ}	SW = V_{CC} (Figure 8)		Full	-	-	**120**	ns
Driver Disable from Output High	t_{HZ}	SW = GND (Figure 8)		Full	-	-	**120**	ns
Time to Shutdown	t_{SHDN}	(Note 15)		Full	**60**	160	**600**	ns
Driver Enable from Shutdown to Output High	$t_{ZH(SHDN)}$	SW = GND (Figure 8), (Notes 15, 16)		Full	-	-	**2000**	ns
Driver Enable from Shutdown to Output Low	$t_{ZL(SHDN)}$	SW = V_{CC} (Figure 8), (Notes 15, 16)		Full	-	-	**2000**	ns
RECEIVER SWITCHING CHARACTERISTICS (250kbps Versions; ISL31490E through ISL31492E)								
Maximum Data Rate	f_{MAX}	-25V ≤ V_{CM} ≤ 25V (Figure 10)		Full	**0.25**	5	**-**	Mbps
Receiver Input to Output Delay	t_{PLH}, t_{PHL}	-25V ≤ V_{CM} ≤ 25V (Figure 10)		Full	-	200	**280**	ns
Receiver Skew | t_{PLH} - t_{PHL} |	t_{SKD}	(Figure 10)		Full	-	4	**10**	ns
Receiver Enable to Output Low	t_{ZL}	R_L = 1kΩ, C_L = 15pF, SW = V_{CC} (Figure 11), (Notes 14, 20)		Full	-	-	**50**	ns
Receiver Enable to Output High	t_{ZH}	R_L = 1kΩ, C_L = 15pF, SW = GND (Figure 11), (Notes 14, 20)		Full	-	-	**50**	ns
Receiver Disable from Output Low	t_{LZ}	R_L = 1kΩ, C_L = 15pF, SW = V_{CC} (Figure 11) (Note 20)		Full	-	-	**50**	ns
Receiver Disable from Output High	t_{HZ}	R_L = 1kΩ, C_L = 15pF, SW = GND (Figure 11) (Note 20)		Full	-	-	**50**	ns
Time to Shutdown	t_{SHDN}	(Note 15)		Full	**60**	160	**600**	ns
Receiver Enable from Shutdown to Output High	$t_{ZH(SHDN)}$	R_L = 1kΩ, C_L = 15pF, SW = GND (Figure 11), (Notes 15, 17)		Full	-	-	**2000**	ns
Receiver Enable from Shutdown to Output Low	$t_{ZL(SHDN)}$	R_L = 1kΩ, C_L = 15pF, SW = V_{CC} (Figure 11), (Notes 15, 17)		Full	-	-	**2000**	ns
RECEIVER SWITCHING CHARACTERISTICS (1Mbps Versions; ISL31493E, ISL31495E)								
Maximum Data Rate	f_{MAX}	-25V ≤ V_{CM} ≤ 25V (Figure 10)		Full	**1**	15	**-**	Mbps
Receiver Input to Output Delay	t_{PLH}, t_{PHL}	-25V ≤ V_{CM} ≤ 25V (Figure 10)		Full	-	90	**150**	ns
Receiver Skew | t_{PLH} - t_{PHL} |	t_{SKD}	(Figure 10)		Full	-	4	**10**	ns
Receiver Enable to Output Low	t_{ZL}	R_L = 1kΩ, C_L = 15pF, SW = V_{CC} (Figure 11), (Note 14)		Full	-	-	**50**	ns
Receiver Enable to Output High	t_{ZH}	R_L = 1kΩ, C_L = 15pF, SW = GND (Figure 11), (Note 14)		Full	-	-	**50**	ns
Receiver Disable from Output Low	t_{LZ}	R_L = 1kΩ, C_L = 15pF, SW = V_{CC} (Figure 11)		Full	-	-	**50**	ns
Receiver Disable from Output High	t_{HZ}	R_L = 1kΩ, C_L = 15pF, SW = GND (Figure 11)		Full	-	-	**50**	ns
Time to Shutdown	t_{SHDN}	(Note 15)		Full	**60**	160	**600**	ns
Receiver Enable from Shutdown to Output High	$t_{ZH(SHDN)}$	R_L = 1kΩ, C_L = 15pF, SW = GND (Figure 11), (Notes 15, 17)		Full	-	-	**2000**	ns

Electrical Specifications Test Conditions: V_{CC} = 4.5V to 5.5V; Unless Otherwise Specified. Typicals are at V_{CC} = 5V, T_A = +25°C (Note 10). **Boldface limits apply across the operating temperature range, -40°C to +85°C. (Continued)**

PARAMETER	SYMBOL	TEST CONDITIONS	TEMP (°C)	MIN (Note 18)	TYP	MAX (Note 18)	UNITS
Receiver Enable from Shutdown to Output Low	$t_{ZL(SHDN)}$	R_L = 1kΩ, C_L = 15pF, SW = V_{CC} (Figure 11), (Notes 15, 17)	Full	-	-	**2000**	ns
RECEIVER SWITCHING CHARACTERISTICS (15Mbps Versions; ISL31496E, ISL31498E)							
Maximum Data Rate	f_{MAX}	-25V ≤ V_{CM} ≤ 25V (Figure 10)	Full	**15**	25	**-**	Mbps
Receiver Input to Output Delay	t_{PLH}, t_{PHL}	-25V ≤ V_{CM} ≤ 25V (Figure 10)	Full	-	35	**70**	ns
Receiver Skew | t_{PLH} - t_{PHL} |	t_{SKD}	(Figure 10)	Full	-	4	**10**	ns
Receiver Enable to Output Low	t_{ZL}	R_L = 1kΩ, C_L = 15pF, SW = V_{CC} (Figure 11), (Note 14)	Full	-	-	**50**	ns
Receiver Enable to Output High	t_{ZH}	R_L = 1kΩ, C_L = 15pF, SW = GND (Figure 11), (Note 14)	Full	-	-	**50**	ns
Receiver Disable from Output Low	t_{LZ}	R_L = 1kΩ, C_L = 15pF, SW = V_{CC} (Figure 11)	Full	-	-	**50**	ns
Receiver Disable from Output High	t_{HZ}	R_L = 1kΩ, C_L = 15pF, SW = GND (Figure 11)	Full	-	-	**50**	ns
Time to Shutdown	t_{SHDN}	(Note 15)	Full	**60**	160	**600**	ns
Receiver Enable from Shutdown to Output High	$t_{ZH(SHDN)}$	R_L = 1kΩ, C_L = 15pF, SW = GND (Figure 11), (Notes 15, 17)	Full	-	-	**2000**	ns
Receiver Enable from Shutdown to Output Low	$t_{ZL(SHDN)}$	R_L = 1kΩ, C_L = 15pF, SW = V_{CC} (Figure 11), (Notes 15, 17)	Full	-	-	**2000**	ns

NOTES:

10. All currents into device pins are positive; all currents out of device pins are negative. All voltages are referenced to device ground unless otherwise specified.
11. Supply current specification is valid for loaded drivers when DE = 0V.
12. Applies to peak current. See "Typical Performance Curves" beginning on page 16 for more information.
13. Keep $\overline{RE}$ = 0 to prevent the device from entering SHDN.
14. The $\overline{RE}$ signal high time must be short enough (typically <100ns) to prevent the device from entering SHDN.
15. Transceivers (except on the ISL31491E) are put into shutdown by bringing $\overline{RE}$ high and DE low. If the inputs are in this state for less than 60ns, the parts are guaranteed not to enter shutdown. If the inputs are in this state for at least 600ns, the parts are guaranteed to have entered shutdown. See "Low Power Shutdown Mode" on page 15.
16. Keep $\overline{RE}$ = VCC, and set the DE signal low time >600ns to ensure that the device enters SHDN.
17. Set the $\overline{RE}$ signal high time >600ns to ensure that the device enters SHDN.
18. Parameters with MIN and/or MAX limits are 100% tested at +25°C, unless otherwise specified. Temperature limits established by characterization and are not production tested.
19. Tested according to TIA/EIA-485-A, Section 4.2.6 (±80V for 15µs at a 1% duty cycle).
20. Does not apply to the ISL31491E.
21. See "Caution" statement below the "Recommended Operating Conditions" section on page 7.
22. This parameter is not production tested.

Test Circuits and Waveforms

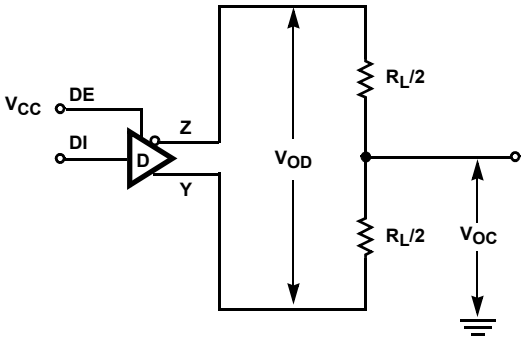

FIGURE 6A. V_{OD} AND V_{OC}

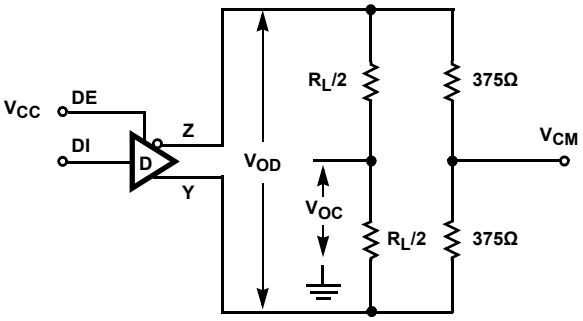

FIGURE 6B. V_{OD} AND V_{OC} WITH COMMON MODE LOAD

FIGURE 6. DC DRIVER TEST CIRCUITS

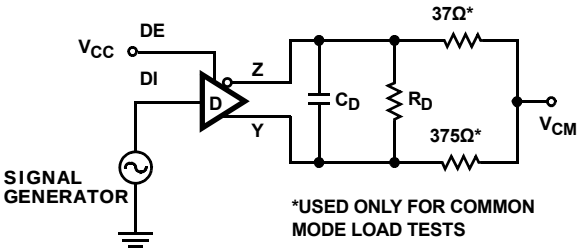

FIGURE 7A. TEST CIRCUIT

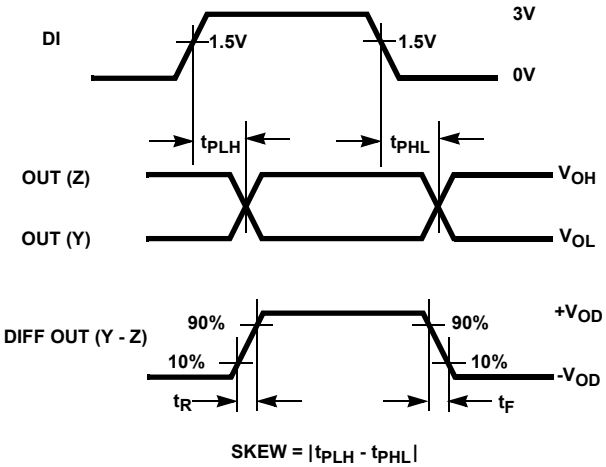

FIGURE 7B. MEASUREMENT POINTS

FIGURE 7. DRIVER PROPAGATION DELAY AND DIFFERENTIAL TRANSITION TIMES

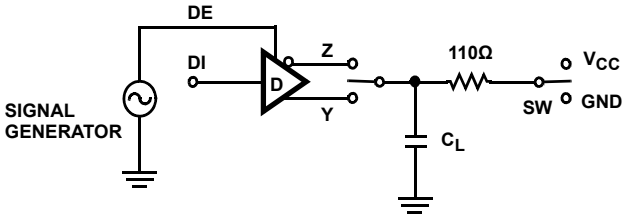

PARAMETER	OUTPUT	$\overline{RE}$	DI	SW	C_L (pF)
t_{HZ}	Y/Z	X	1/0	GND	50
t_{LZ}	Y/Z	X	0/1	V_{CC}	50
t_{ZH}	Y/Z	0 (Note 13)	1/0	GND	100
t_{ZL}	Y/Z	0 (Note 13)	0/1	V_{CC}	100
$t_{ZH(SHDN)}$	Y/Z	1 (Note 16)	1/0	GND	100
$t_{ZL(SHDN)}$	Y/Z	1 (Note 16)	0/1	V_{CC}	100

FIGURE 8A. TEST CIRCUIT

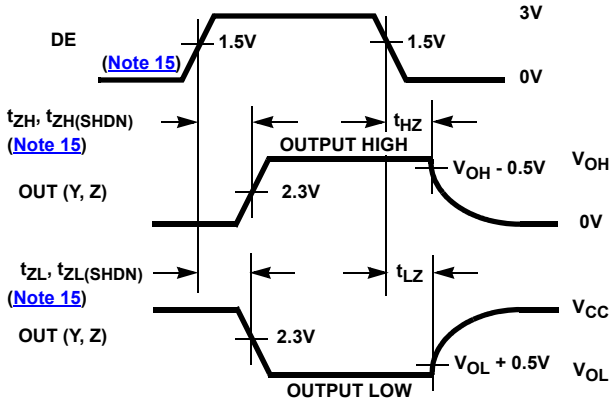

FIGURE 8B. MEASUREMENT POINTS

FIGURE 8. DRIVER ENABLE AND DISABLE TIMES

Test Circuits and Waveforms (Continued)

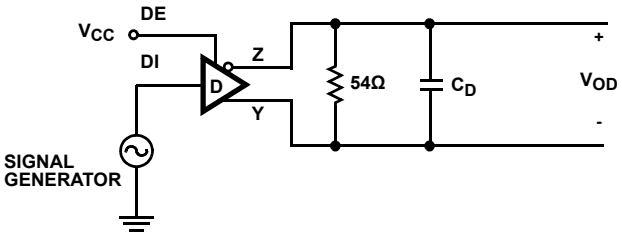

FIGURE 9A. TEST CIRCUIT

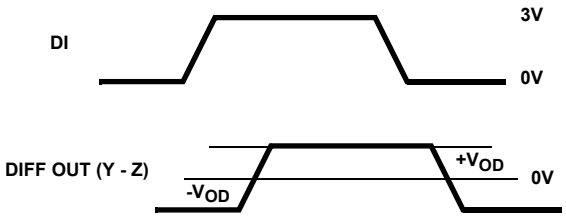

FIGURE 9B. MEASUREMENT POINTS

FIGURE 9. DRIVER DATA RATE

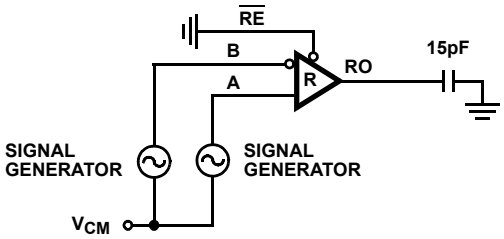

FIGURE 10A. TEST CIRCUIT

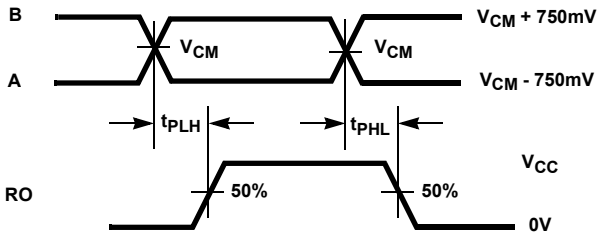

FIGURE 10B. MEASUREMENT POINTS

FIGURE 10. RECEIVER PROPAGATION DELAY AND DATA RATE

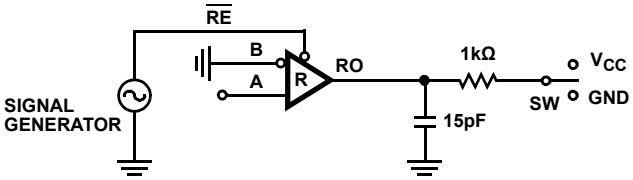

PARAMETER	DE	A	SW
t_{HZ}	0	+1.5V	GND
t_{LZ}	0	-1.5V	V_{CC}
t_{ZH} (Note 14)	0	+1.5V	GND
t_{ZL} (Note 14)	0	-1.5V	V_{CC}
$t_{ZH(SHDN)}$ (Note 17)	0	+1.5V	GND
$t_{ZL(SHDN)}$ (Note 17)	0	-1.5V	V_{CC}

FIGURE 11A. TEST CIRCUIT

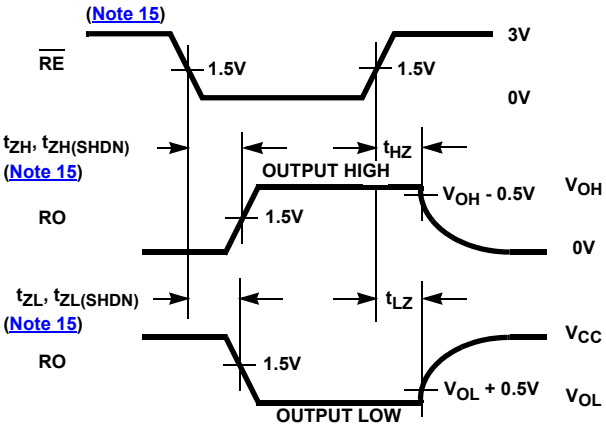

FIGURE 11B. MEASUREMENT POINTS

FIGURE 11. RECEIVER ENABLE AND DISABLE TIMES

Application Information

RS-485 and RS-422 are differential (balanced) data transmission standards used for long haul or noisy environments. RS-422 is a subset of RS-485, so RS-485 transceivers are also RS-422 compliant. RS-422 is a point-to-multipoint (multidrop) standard, which allows only one driver and up to 10 (assuming one unit load devices) receivers on each bus. RS-485 is a true multipoint standard, which allows up to 32 one unit load devices (any combination of drivers and receivers) on each bus. To allow for multipoint operation, the RS-485 specification requires that drivers must handle bus contention without sustaining any damage.

Another important advantage of RS-485 is the extended Common Mode Range (CMR), which specifies that the driver outputs and receiver inputs withstand signals that range from +12V to -7V. RS-422 and RS-485 are intended for runs as long as 4000', thus the wide CMR is necessary to handle ground potential differences, as well as voltages induced in the cable by external fields.

The ISL3149xE is a family of ruggedized RS-485 transceivers that improves on the RS-485 basic requirements, and therefore increases system reliability. The CMR increases to ±25V, while the RS-485 bus pins (receiver inputs and driver outputs) include fault protection against voltages and transients up to ±60V. Additionally, larger than required differential output voltages (V_{OD}) increase noise immunity.

Receiver (Rx) Features

These devices utilize a differential input receiver for maximum noise immunity and common mode rejection. Input sensitivity is better than ±200mV, as required by the RS-422 and RS-485 specifications.

Receiver input (load) current surpasses the RS-422 specification of 3mA, and is four times lower than the RS-485 "Unit Load (UL)" requirement of 1mA maximum. Thus, these products are known as "one-quarter UL" transceivers, and there can be up to 128 of these devices on a network while still complying with the RS-485 loading specification.

The Rx functions with common mode voltages as great as ±25V, making them ideal for industrial, or long networks where induced voltages are a realistic concern.

All the receivers include a "full fail-safe" function that guarantees a high level receiver output if the receiver inputs are unconnected (floating), shorted together, or connected to a terminated bus with all the transmitters disabled (i.e., an idle bus).

Rx outputs feature high drive levels (typically 22mA at V_{OL} = 1V) to ease the design of optically coupled isolated interfaces.

Receivers easily meet the data rates supported by the corresponding driver, and all receiver outputs are three-statable via the active low $\overline{RE}$ input (except on the ISL31491E).

The Rx in the 250kbps and 1Mbps versions include noise filtering circuitry to reject high frequency signals. The 1Mbps version typically rejects pulses narrower than 50ns (equivalent to 20Mbps), while the 250kbps Rx rejects pulses below 150ns (6.7Mbps).

Driver (Tx) Features

The RS-485/RS-422 driver is a differential output device that delivers at least 1.5V across a 54Ω load (RS-485), and at least 2.4V across a 100Ω load (RS-422). The drivers feature low propagation delay skew to maximize bit width, and to minimize EMI, and all drivers are three-statable via the active high DE input.

The 250kbps and 1Mbps driver outputs are slew rate limited to minimize EMI, and to minimize reflections in unterminated or improperly terminated networks. Outputs of the ISL31496E and ISL31498E drivers are not limited, thus faster output transition times allow data rates of at least 15Mbps.

High Overvoltage (Fault) Protection Increases Ruggedness

Note: The available smaller pitch packages (e.g., MSOP and TDFN) may not meet the creepage and clearance (C&C) requirements for ±60V levels. The user is advised to determine his C&C requirements before selecting a package type.

The ±60V (referenced to the IC GND) fault protection on the RS-485 pins, makes these transceivers some of the most rugged on the market. This level of protection makes the ISL3149xE perfect for applications where power (e.g., 24V and 48V supplies) must be routed in the conduit with the data lines, or for outdoor applications where large transients are likely to occur. When power is routed with the data lines, even a momentary short between the supply and data lines will destroy an unprotected device. The ±60V fault levels of this family are at least **five times higher** than the levels specified for standard RS-485 ICs. The ISL3149xE protection is active whether the Tx is enabled or disabled, and even if the IC is powered down.

If transients or voltages (including overshoots and ringing) greater than ±60V are possible, then additional external protection is required.

Widest Common Mode Voltage (CMV) Tolerance Improves Operating Range

RS-485 networks operating in industrial complexes, or over long distances, are susceptible to large CMV variations. Either of these operating environments may suffer from large node-to-node ground potential differences, or CMV pickup from external electromagnetic sources, and devices with only the minimum required +12V to -7V CMR may malfunction. The ISL3149xE's extended ±25V CMR is the widest available, allowing operation in environments that would overwhelm lesser transceivers. Additionally, the Rx will not phase invert (erroneously change state) even with CMVs of ±40V, or differential voltages as large as 40V.

High V_{OD} Improves Noise Immunity and Flexibility

The ISL3149xE driver design delivers larger differential output voltages (V_{OD}) than the RS-485 standard requires, or than most RS-485 transmitters can deliver. The typical ±2.5V V_{OD} provides more noise immunity than networks built using many other transceivers.

Another advantage of the large V_{OD} is the ability to drive more than two bus terminations, which allows for utilizing the ISL3149xE in "star" and other multiterminated, nonstandard network topologies. Figure 13 details the transmitter's V_{OD} vs I_{OUT} characteristic, and includes load lines for four (30Ω) and six (20Ω) 120Ω terminations. Figure 13 shows that the driver typically delivers ±1.3V into six terminations, and the "Electrical Specifications" table guarantees a V_{OD} of ±0.8V at 21Ω over the full temperature range. The RS-485 standard requires a minimum 1.5V V_{OD} into two terminations, but the ISL3149xE deliver RS-485 voltage levels with 2x to 3x the number of terminations.

Hot Plug Function

When a piece of equipment powers up, there is a period of time where the processor or ASIC driving the RS-485 control lines (DE, $\overline{RE}$) is unable to ensure that the RS-485 Tx and Rx outputs are kept disabled. If the equipment is connected to the bus, a driver activating prematurely during power-up may crash the bus. To avoid this scenario, the ISL3149xE devices incorporate a "Hot Plug" function. Circuitry monitoring V_{CC} ensures that, during power-up and power-down, the Tx and Rx outputs remain disabled, regardless of the state of DE and $\overline{RE}$, if V_{CC} is less than ≈3.5V. This gives the processor/ASIC a chance to stabilize and drive the RS-485 control lines to the proper states. Figure 12 illustrates the power-up and power-down performance of the ISL3149xE compared to an RS-485 IC without the Hot Plug feature.

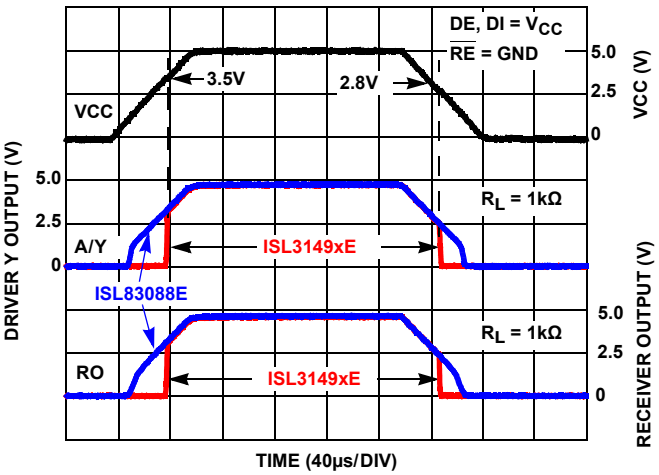

FIGURE 12. HOT PLUG PERFORMANCE (ISL3149xE) vs ISL83088E WITHOUT HOT PLUG CIRCUITRY

Data Rate, Cables and Terminations

RS-485/RS-422 are intended for network lengths up to 4000', but the maximum system data rate decreases as the transmission length increases. Devices operating at 15Mbps may be used at lengths up to 150' (46m), but the distance can be increased to 328' (100m) by operating at 10Mbps. The 1Mbps versions can operate at full data rates with lengths up to 800' (244m). Jitter is the limiting parameter at these faster data rates, so employing encoded data streams (e.g., Manchester coded or Return-to-Zero) may allow increased transmission distances. The slow versions can operate at 115kbps, or less, at the full 4000' (1220m) distance, or at 250kbps for lengths up to 3000' (915m). DC cable attenuation is the limiting parameter, so using better quality cables (e.g., 22 AWG) may allow increased transmission distance.

Twisted pair is the cable of choice for RS-485/RS-422 networks. Twisted pair cables tend to pick up noise and other electromagnetically induced voltages as common mode signals, which are effectively rejected by the differential receivers in these ICs.

Proper termination is imperative, when using the 15Mbps devices, to minimize reflections. Short networks using the 250kbps versions need not be terminated, however, terminations are recommended unless power dissipation is an overriding concern.

In point-to-point, or point-to-multipoint (single driver on bus like RS-422) networks, the main cable should be terminated in its characteristic impedance (typically 120Ω) at the end farthest from the driver. In multireceiver applications, stubs connecting receivers to the main cable should be kept as short as possible. Multipoint (multidriver) systems require that the main cable be terminated in its characteristic impedance at both ends. Stubs connecting a transceiver to the main cable should be kept as short as possible.

Built-in Driver Overload Protection

As stated previously, the RS-485 specification requires that drivers survive worst case bus contentions undamaged. These transceivers meet this requirement via driver output short circuit current limits, and on-chip thermal shutdown circuitry.

The driver output stages incorporate a double foldback short circuit current limiting scheme which ensures that the output current never exceeds the RS-485 specification, even at the common mode and fault condition voltage range extremes. The first foldback current level (≈70mA) is set to ensure that the driver never folds back when driving loads with common mode voltages up to ±25V. The very low second foldback current setting (≈9mA) minimizes power dissipation if the Tx is enabled when a fault occurs.

In the event of a major short circuit condition, devices also include a thermal shutdown feature that disables the drivers whenever the die temperature becomes excessive. This eliminates the power dissipation, allowing the die to cool. The drivers automatically re-enable after the die temperature drops about +15°C. If the contention persists, the thermal shutdown/re-enable cycle repeats until the fault is cleared. Receivers stay operational during thermal shutdown.

Low Power Shutdown Mode

These CMOS transceivers all use a fraction of the power required by competitive devices, but they also include a shutdown feature that reduces the already low quiescent I_{CC} to a 10µA trickle. These devices enter shutdown whenever the receiver and driver are *simultaneously* disabled ($\overline{RE}$ = V_{CC} and DE = GND) for a period of at least 600ns. Disabling both the driver and the receiver for less than 60ns guarantees that the transceiver will not enter shutdown.

Note that receiver and driver enable times increase when the transceiver enables from shutdown. Refer to Notes 13, 14, 15, 16 and 17, at the end of the "Electrical Specification" table on page 11, for more information.

Typical Performance Curves V_{CC} = 5V, T_A = +25°C; Unless Otherwise Specified.

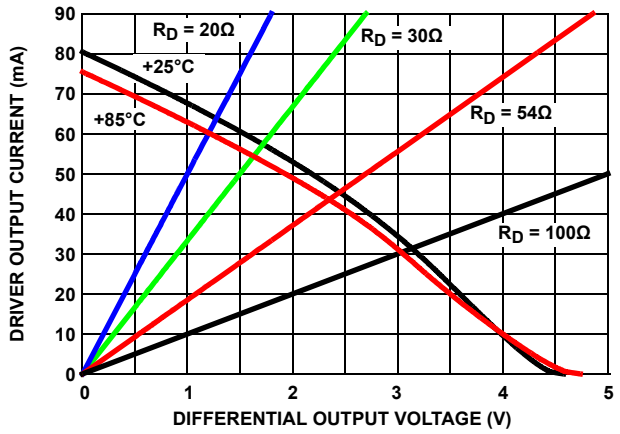

FIGURE 13. DRIVER OUTPUT CURRENT vs DIFFERENTIAL OUTPUT VOLTAGE

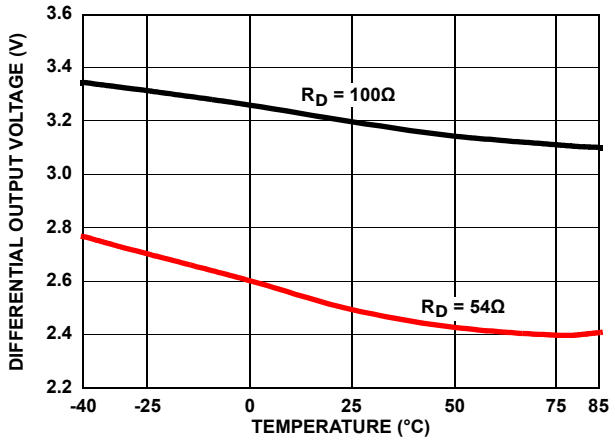

FIGURE 14. DRIVER DIFFERENTIAL OUTPUT VOLTAGE vs TEMPERATURE

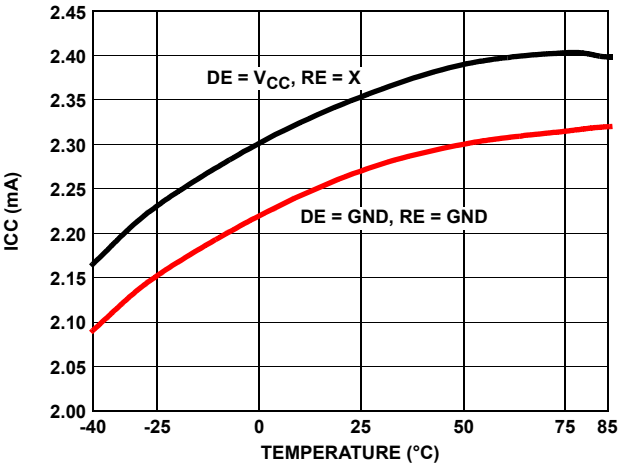

FIGURE 15. SUPPLY CURRENT vs TEMPERATURE

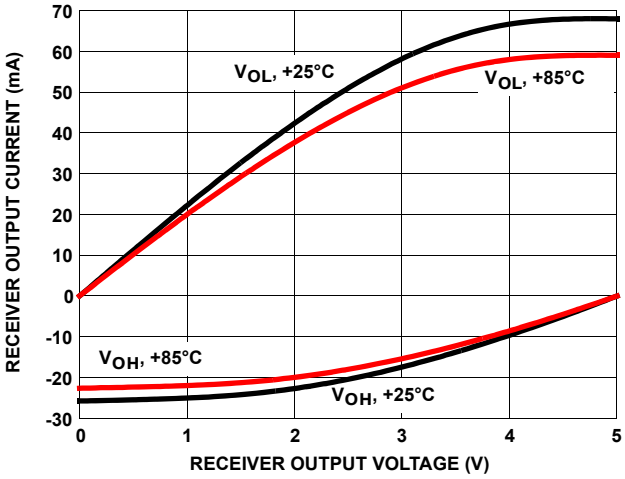

FIGURE 16. RECEIVER OUTPUT CURRENT vs RECEIVER OUTPUT VOLTAGE

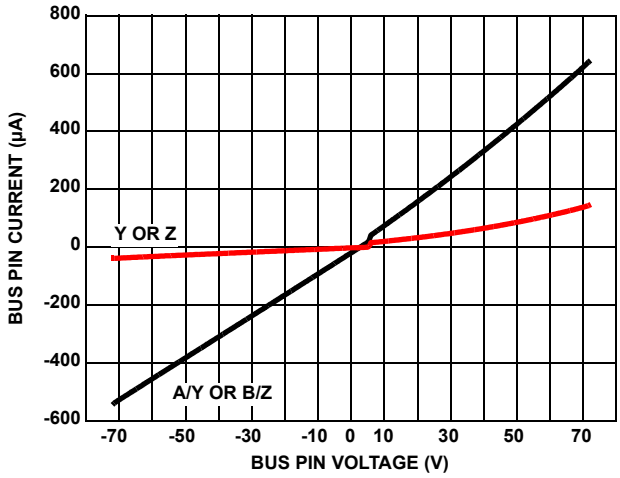

FIGURE 17. BUS PIN CURRENT vs BUS PIN VOLTAGE

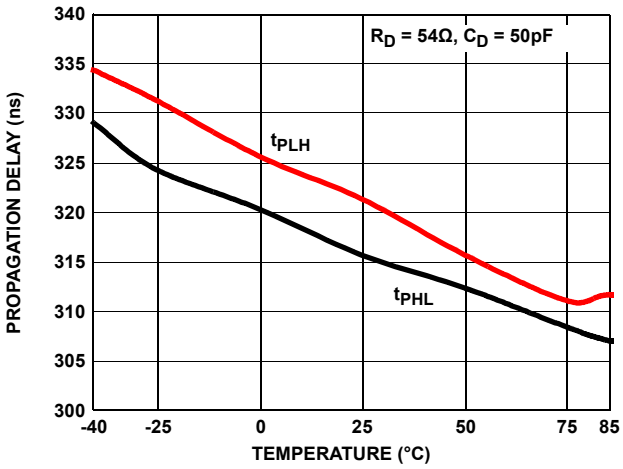

FIGURE 18. DRIVER DIFFERENTIAL PROPAGATION DELAY vs TEMPERATURE (ISL31490E, ISL31491E, ISL31492E)

Typical Performance Curves V_{CC} = 5V, T_A = +25°C; Unless Otherwise Specified. **(Continued)**

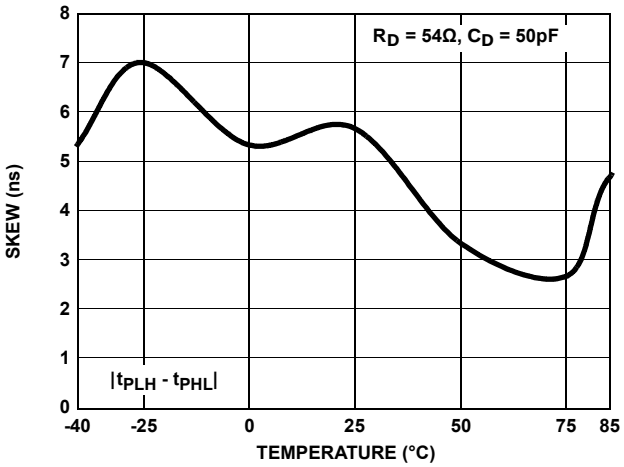

FIGURE 19. DRIVER DIFFERENTIAL SKEW vs TEMPERATURE (ISL31490E, ISL31491E, ISL31492E)

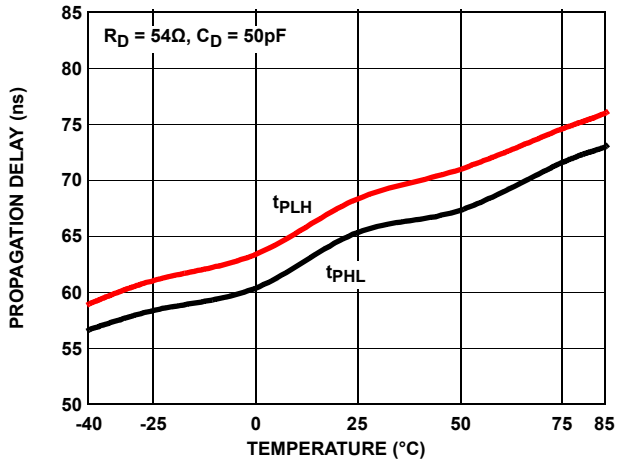

FIGURE 20. DRIVER DIFFERENTIAL PROPAGATION DELAY vs TEMPERATURE (ISL31493E, ISL31495E)

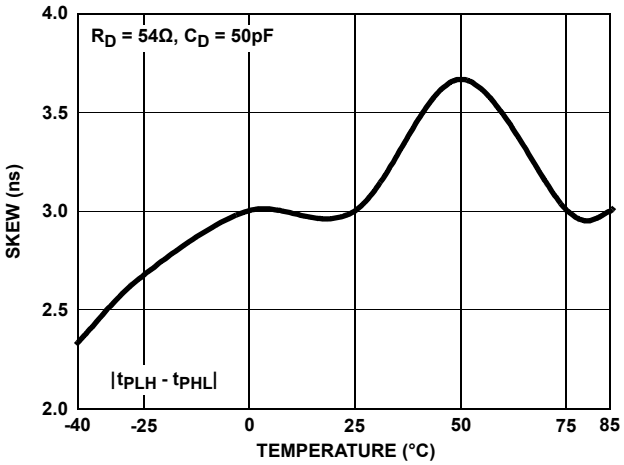

FIGURE 21. DRIVER DIFFERENTIAL SKEW vs TEMPERATURE (ISL31493E, ISL31495E)

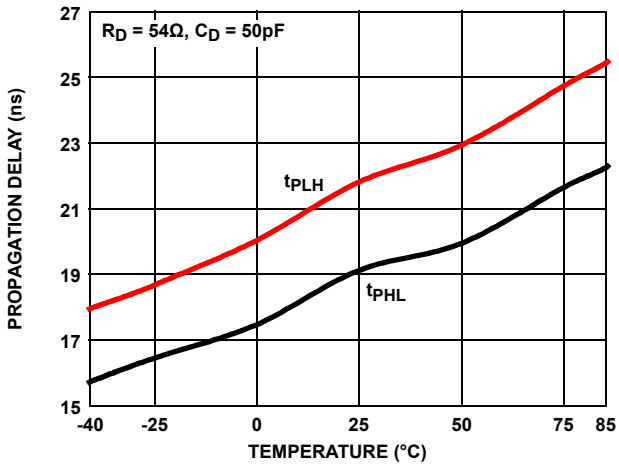

FIGURE 22. DRIVER DIFFERENTIAL PROPAGATION DELAY vs TEMPERATURE (ISL31496E, ISL31498E)

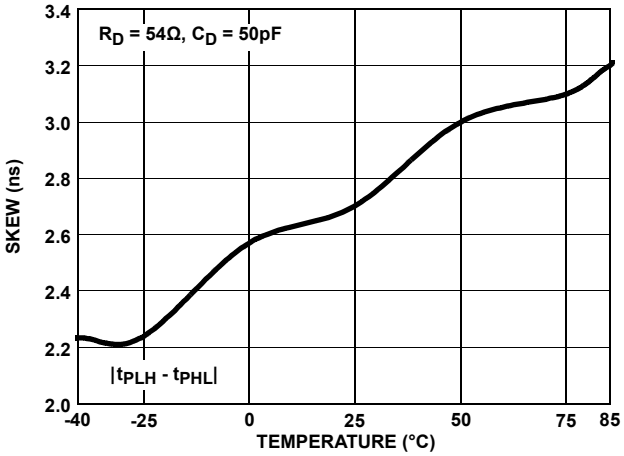

FIGURE 23. DRIVER DIFFERENTIAL SKEW vs TEMPERATURE (ISL31496E, ISL31498E)

Typical Performance Curves V_{CC} = 5V, T_A = +25°C; Unless Otherwise Specified. **(Continued)**

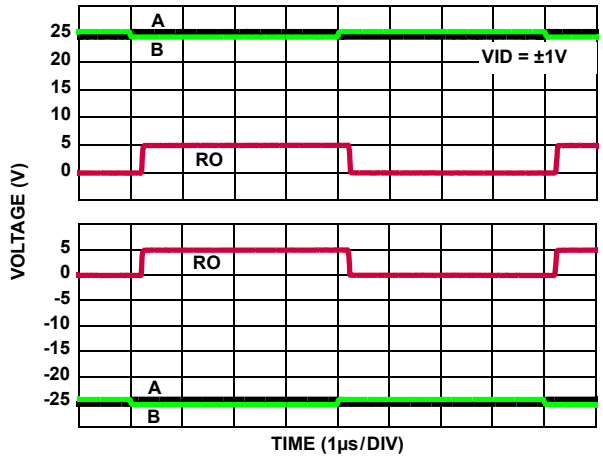

FIGURE 24. ±25V RECEIVER PERFORMANCE (ISL31490E, ISL31491E, ISL31492E)

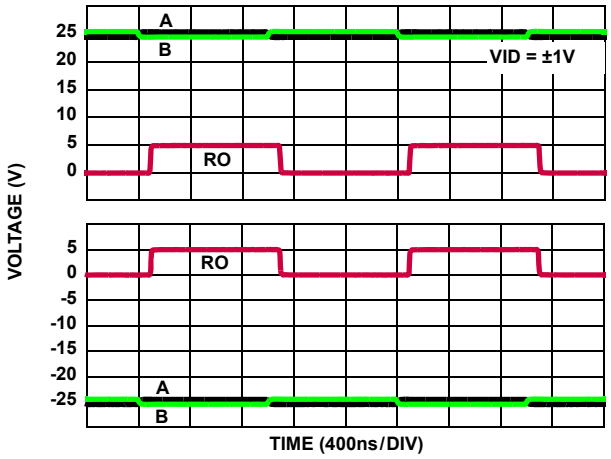

FIGURE 25. ±25V RECEIVER PERFORMANCE (ISL31493E, ISL31495E)

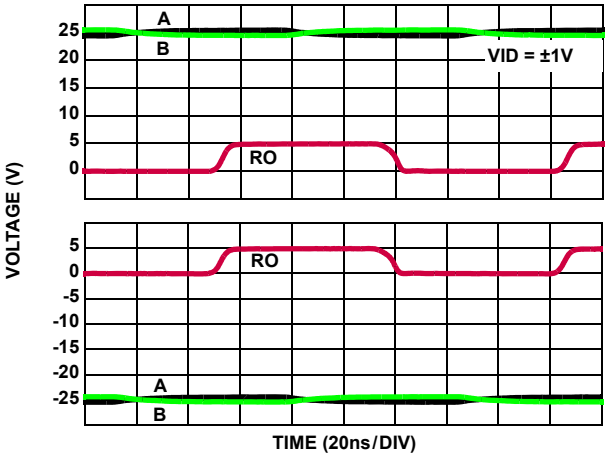

FIGURE 26. ±25V RECEIVER PERFORMANCE (ISL31496E, ISL31498E)

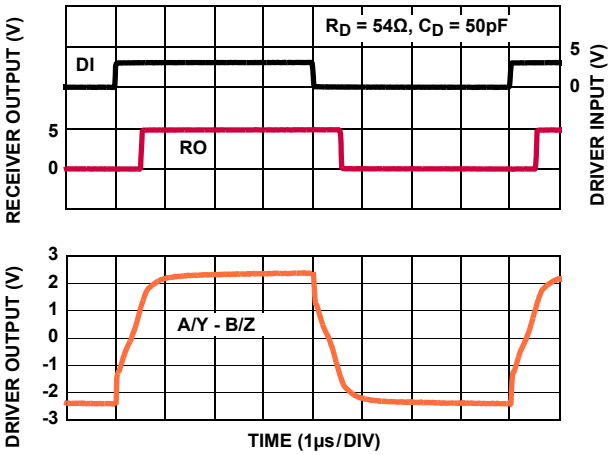

FIGURE 27. DRIVER AND RECEIVER WAVEFORMS (ISL31490E, ISL31491E, ISL31492E)

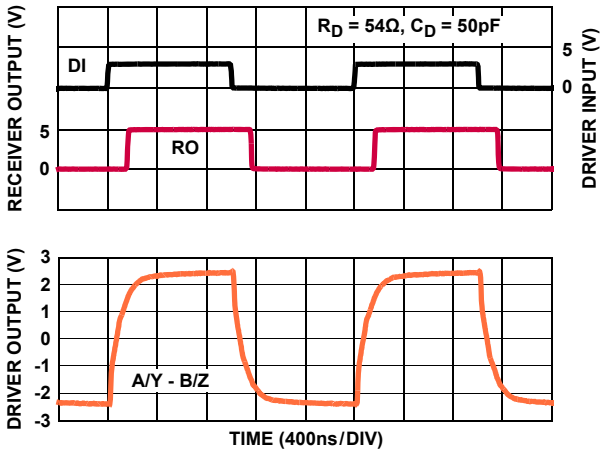

FIGURE 28. DRIVER AND RECEIVER WAVEFORMS (ISL31493E, ISL31495E)

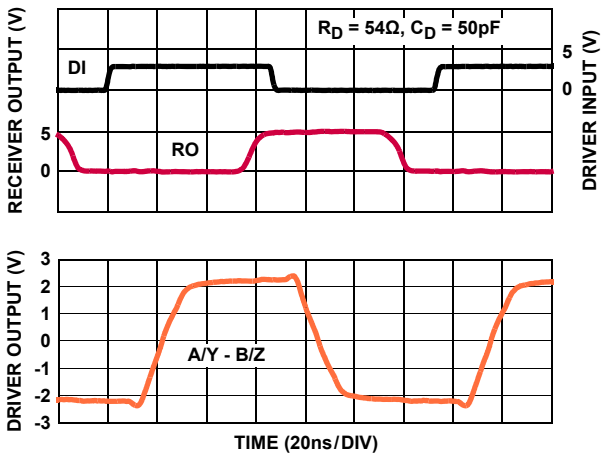

FIGURE 29. DRIVER AND RECEIVER WAVEFORMS (ISL31496E, ISL31498E)

Die Characteristics

SUBSTRATE POTENTIAL (Powered Up) AND TDFN EPAD:

GND

PROCESS:

Si Gate BiCMOS

Revision History

The revision history provided is for informational purposes only and is believed to be accurate, but not warranted. Please go to web to make sure you have the latest Rev.

DATE	REVISION	CHANGE
May 13, 2015	FN7637.3	On page page 9: -Updated max limit under “DRIVER SWITCHING CHARACTERISTICS (250kbps Versions; ISL31490E through ISL31492E)” for “Driver Differential rise and Fall Time” from 1200 to 1350 (2nd row). -Updated max limit under “DRIVER SWITCHING CHARACTERISTICS (1Mbps Versions; ISL31493E, ISL31495E)” for “Driver Differential rise and Fall Time” from 400 to 550 (2nd row). Updated POD L10.3X3A to the latest is revision. Changes from Revision 5 to Revision 6 are as follows: -Tiebar Note 5 updated From: Tiebar shown (if present) is a non-functional feature. To: Tiebar shown (if present) is a non-functional feature and may be located on any of the 4 sides (or ends).
October 24, 2014	FN7637.2	Stamped datasheet “Not recommended for New Designs. For an exact replacement, please see the ISL32490E Series Datasheet". page 7 in "Abs Max" table, changed the "ESD" note to read: "ESD RATING . . . See "ESD Performance" on Page 8" page 9, in "Driver Switching Characteristics (1Mbps version" section, "Driver Differential Output Skew" parameter, in the second "Test Conditions" line, added "(Note 22)" after the -25V = Vcm = 25V" entry. page 11, added a new Note 22 to the notes section saying, "This parameter is not production tested." page 19 updated "Products" section with new "About Intersil" verbiage page 21 - updated POD M10.118 from rev 0 to rev 1. Changes since rev0: Updataed to new template and added land pattern. page 26 updated POD M8.15 from rev 3 to rev 4. Changes since rev 0: Changed Note 1 from “1982” to “1994”
December 15, 2011	FN7637.1	In “Ordering Information” on page 3, changed Package Drawing Number for ISL31492EIRTZ, 8 Ld TDFN from L8.3x3A to L8.3x3K . Updated Tape & Reel note from "Add “-T” suffix for tape and reel." to new standard "Add “-T*” suffix for tape and reel." The "*" covers all possible tape and reel options In “Thermal Information” on page 7, updated Theta JC for 14 Ld SOIC Package from 38 to 39. Updated M8.118 on page 20. Corrected lead width dimension in side view 1 from "0.25 - 0.036" to "0.25 - 0.36" Changed L8.3x3A to L8.3x3K on page 22. In the bottom view, lead height changed from "0.3±0.1" to "0.4±0.05". Lead width changed from "0.3±0.05" to "0.25±0.05". In the land pattern, lead width changed from "0.3" to "0.25". In Detail X, changed "0.2 REF" to "0.203 REF". Updated M8.15 on page 26. Updated to new POD format by removing table and moving dimensions onto drawing and adding land pattern.
June 17, 2010	FN7637.0	Initial Release

About Intersil

Intersil Corporation is a leading provider of innovative power management and precision analog solutions. The company's products address some of the largest markets within the industrial and infrastructure, mobile computing and high-end consumer markets.

For the most updated datasheet, application notes, related documentation and related parts, please see the respective product information page found at www.intersil.com.

You may report errors or suggestions for improving this datasheet by visiting www.intersil.com/ask.

Reliability reports are also available from our website at www.intersil.com/support

Package Outline Drawing

M8.118

8 LEAD MINI SMALL OUTLINE PLASTIC PACKAGE

Rev 4, 7/11

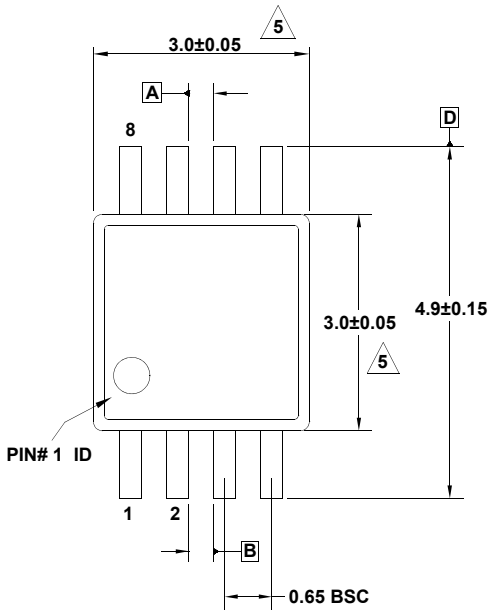

TOP VIEW

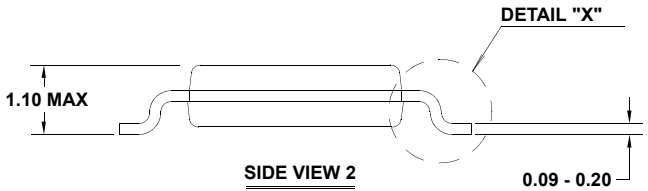

SIDE VIEW 2

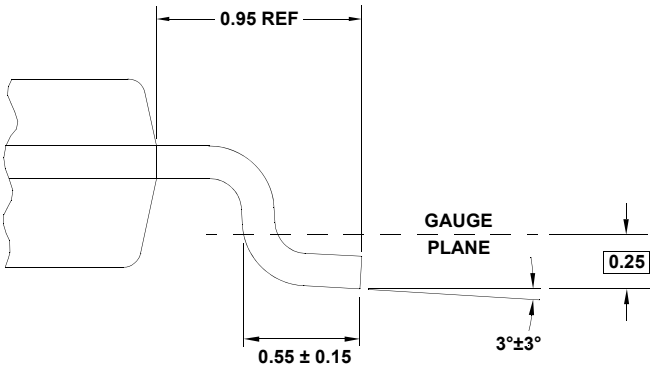

DETAIL "X"

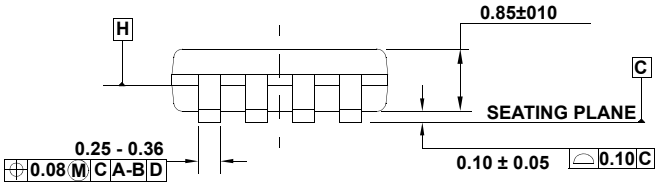

SIDE VIEW 1

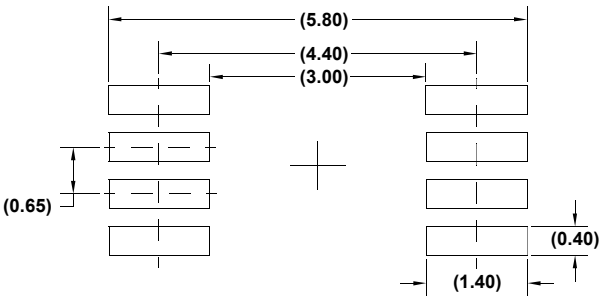

TYPICAL RECOMMENDED LAND PATTERN

NOTES:

1. Dimensions are in millimeters.
2. Dimensioning and tolerancing conform to JEDEC MO-187-AA and AMSEY14.5m-1994.
3. Plastic or metal protrusions of 0.15mm max per side are not included.
4. Plastic interlead protrusions of 0.15mm max per side are not included.
5. Dimensions are measured at Datum Plane "H".
6. Dimensions in ( ) are for reference only.

Package Outline Drawing

M10.118

10 LEAD MINI SMALL OUTLINE PLASTIC PACKAGE

Rev 1, 4/12

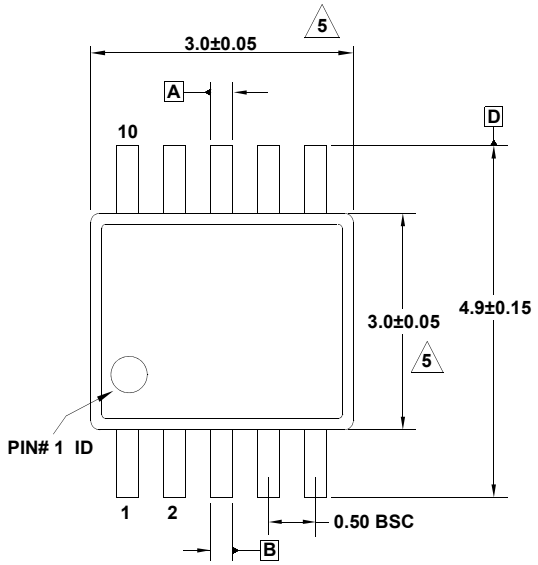

TOP VIEW

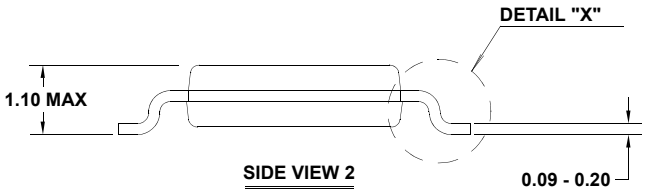

SIDE VIEW 2

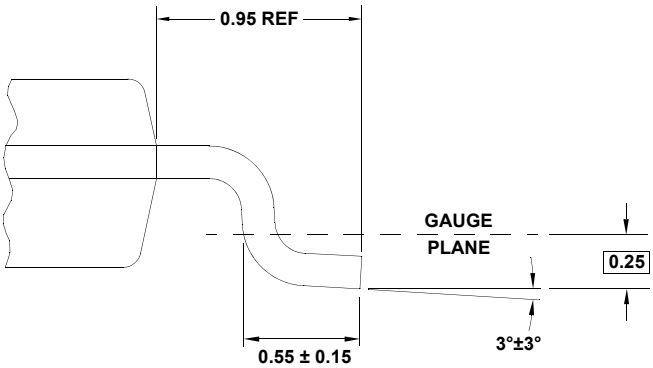

DETAIL "X"

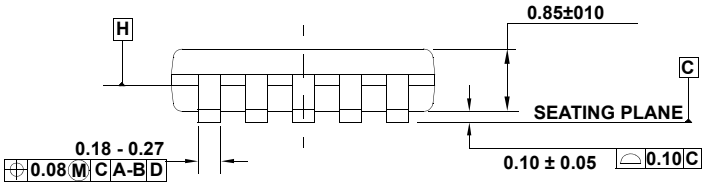

SIDE VIEW 1

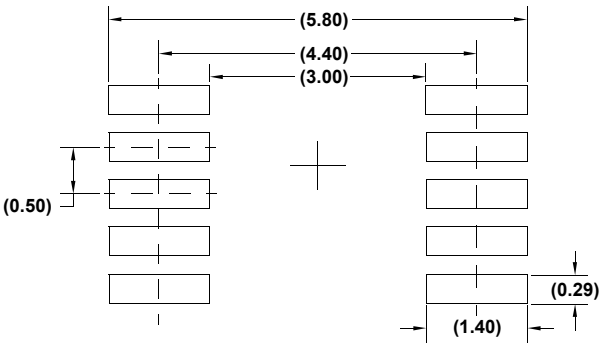

TYPICAL RECOMMENDED LAND PATTERN

NOTES:

1. Dimensions are in millimeters.
2. Dimensioning and tolerancing conform to JEDEC MO-187-BA and AMSEY14.5m-1994.
3. Plastic or metal protrusions of 0.15mm max per side are not included.
4. Plastic interlead protrusions of 0.15mm max per side are not included.
5. Dimensions are measured at Datum Plane "H".
6. Dimensions in ( ) are for reference only.

Package Outline Drawing

L8.3x3K

8 LEAD THIN DUAL FLAT NO-LEAD PLASTIC PACKAGE

Rev 1, 9/11

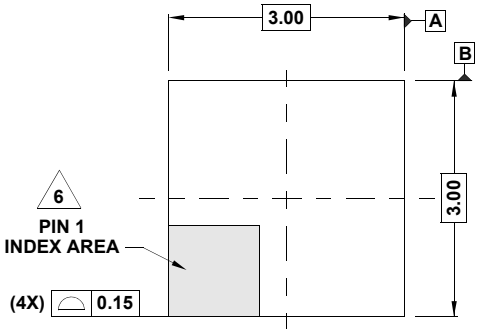

TOP VIEW

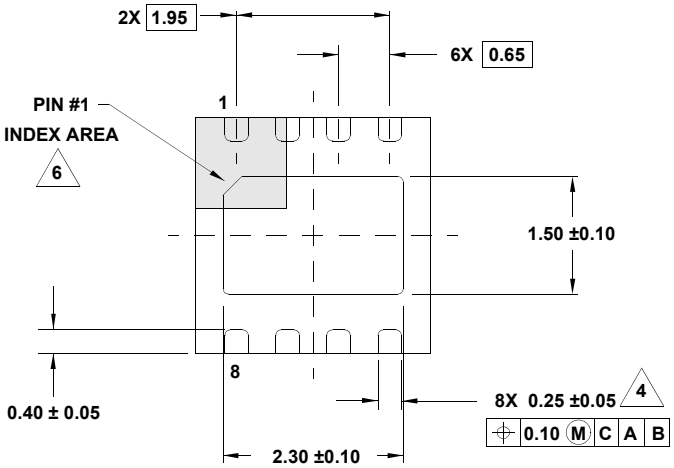

BOTTOM VIEW

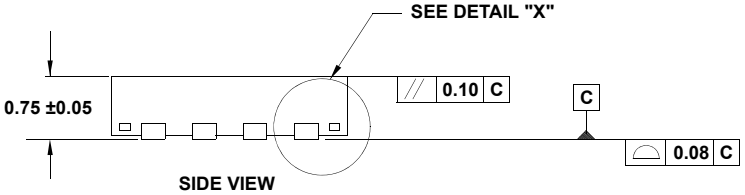

SIDE VIEW

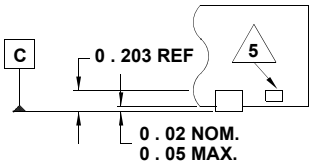

DETAIL "X"

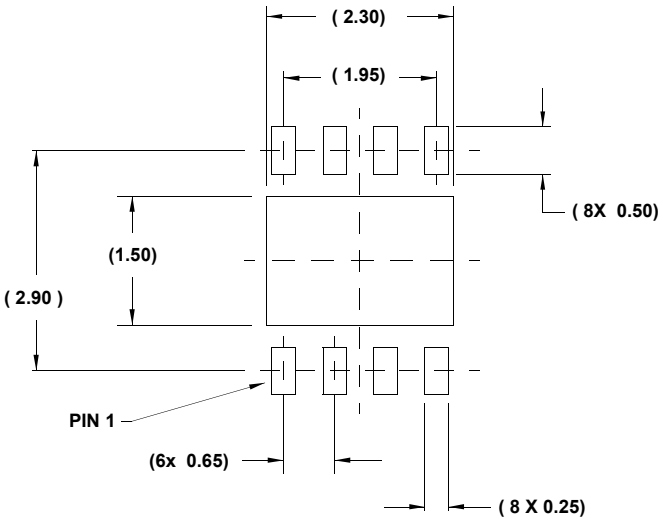

TYPICAL RECOMMENDED LAND PATTERN

NOTES:

1. Dimensions are in millimeters.
   Dimensions in ( ) for Reference Only.
2. Dimensioning and tolerancing conform to AMSE Y14.5m-1994.
3. Unless otherwise specified, tolerance : Decimal ± 0.05
4. Dimension applies to the metallized terminal and is measured between 0.15mm and 0.20mm from the terminal tip.
5. Tiebar shown (if present) is a non-functional feature.
6. The configuration of the pin #1 identifier is optional, but must be located within the zone indicated. The pin #1 identifier may be either a mold or mark feature.
7. Compliant to JEDEC MO-229 WEEC-2 except for the foot length.

Package Outline Drawing

L10.3x3A

10 LEAD THIN DUAL FLAT NO-LEAD PLASTIC PACKAGE

Rev 6, 4/15

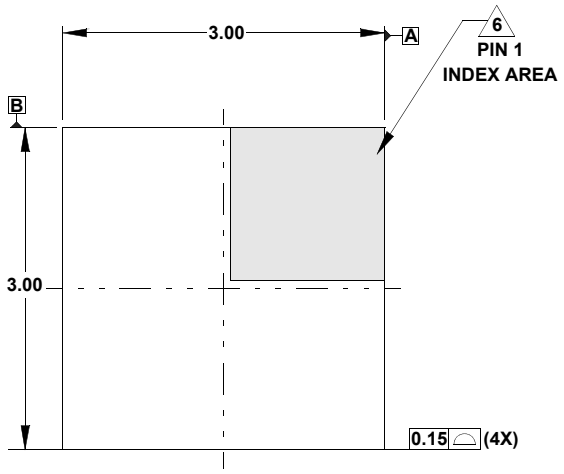

TOP VIEW

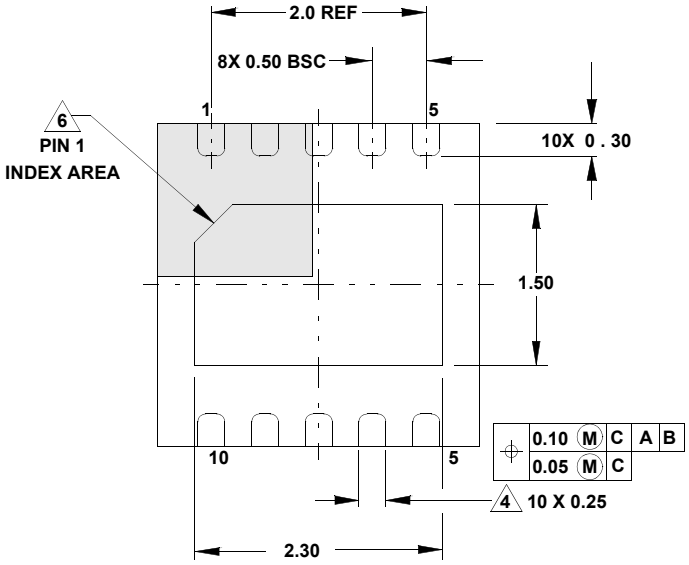

BOTTOM VIEW

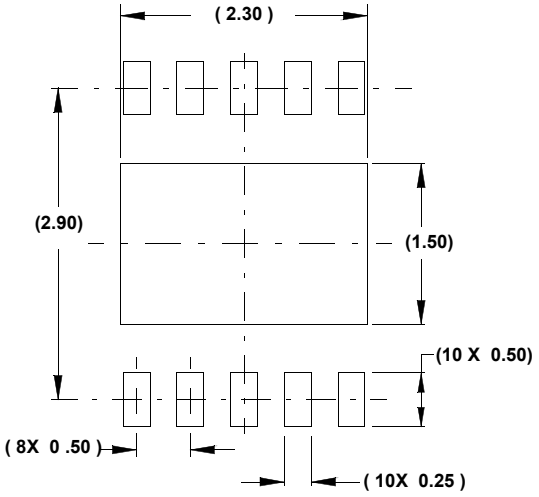

TYPICAL RECOMMENDED LAND PATTERN

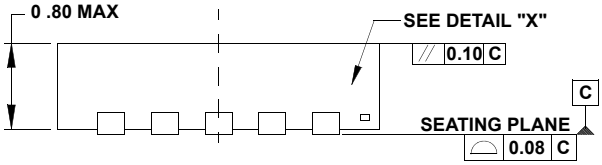

SIDE VIEW

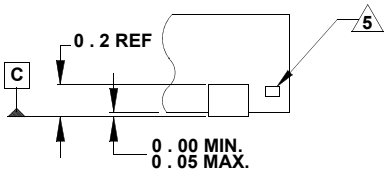

DETAIL "X"

NOTES:

1. Dimensions are in millimeters.
   Dimensions in ( ) for Reference Only.
2. Dimensioning and tolerancing conform to ASME Y14.5m-1994.
3. Unless otherwise specified, tolerance : Decimal ± 0.05
   Angular ±2.50°
4. Dimension applies to the metallized terminal and is measured between 0.15mm and 0.30mm from the terminal tip.
5. Tiebar shown (if present) is a non-functional feature and may be located on any of the 4 sides (or ends).
6. The configuration of the pin #1 identifier is optional, but must be located within the zone indicated. The pin #1 identifier may be either a mold or mark feature.
7. Compliant to JEDEC MO-229-WEED-3 except exposed pad length (2.30mm).

Package Outline Drawing

M14.15

14 LEAD NARROW BODY SMALL OUTLINE PLASTIC PACKAGE

Rev 1, 10/09

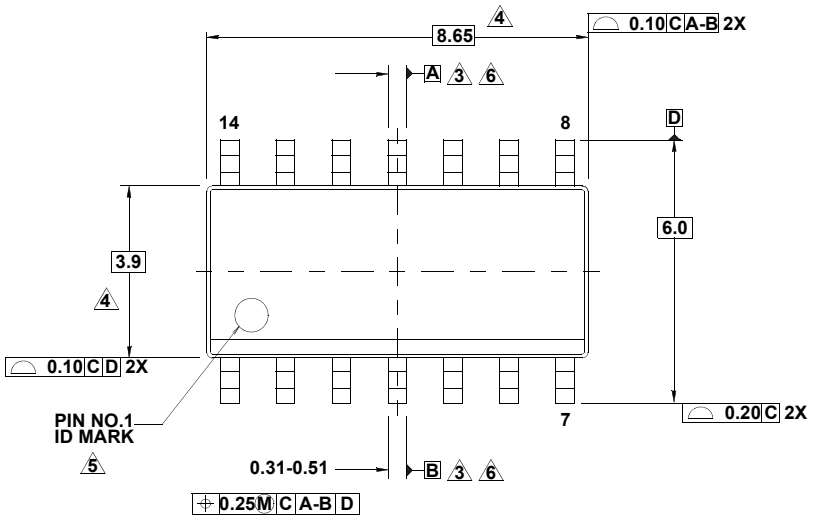

TOP VIEW

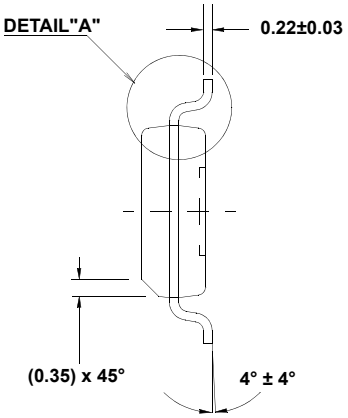

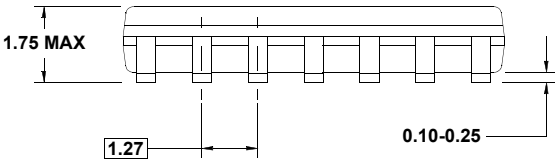

SIDE VIEW

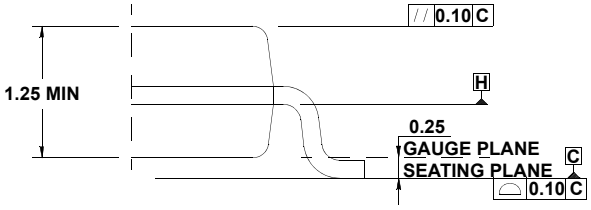

DETAIL "A"

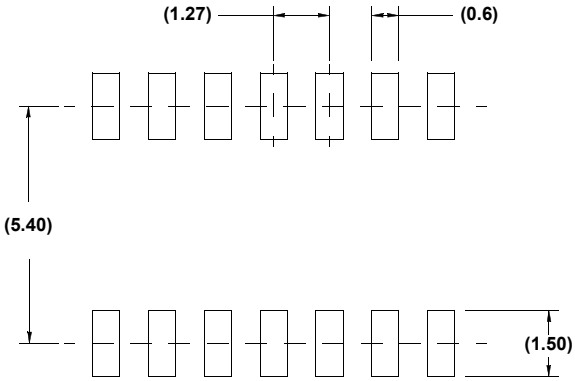

TYPICAL RECOMMENDED LAND PATTERN

NOTES:

1. Dimensions are in millimeters.
   Dimensions in ( ) for Reference Only.
2. Dimensioning and tolerancing conform to AMSEY14.5m-1994.
3. Datums A and B to be determined at Datum H.
4. Dimension does not include interlead flash or protrusions.
   Interlead flash or protrusions shall not exceed 0.25mm per side.
5. The pin #1 indentifier may be either a mold or mark feature.
6. Does not include dambar protrusion. Allowable dambar protrusion shall be 0.10mm total in excess of lead width at maximum condition.
7. Reference to JEDEC MS-012-AB.

Dual-In-Line Plastic Packages (PDIP)

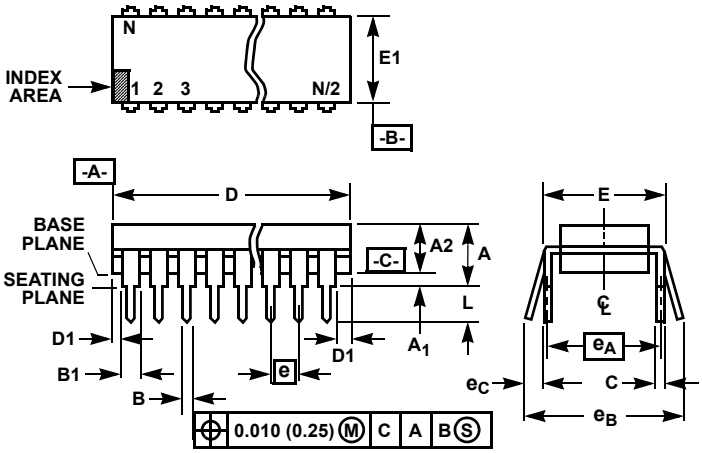

NOTES:

1. Controlling Dimensions: INCH. In case of conflict between English and Metric dimensions, the inch dimensions control.
2. Dimensioning and tolerancing per ANSI Y14.5M-1982.
3. Symbols are defined in the “MO Series Symbol List” in Section 2.2 of Publication No. 95.
4. Dimensions A, A1 and L are measured with the package seated in JEDEC seating plane gauge GS-3.
5. D, D1, and E1 dimensions do not include mold flash or protrusions. Mold flash or protrusions shall not exceed 0.010 inch (0.25mm).
6. E and e_A are measured with the leads constrained to be perpendicular to datum -C-.
7. e_B and e_C are measured at the lead tips with the leads unconstrained. e_C must be zero or greater.
8. B1 maximum dimensions do not include dambar protrusions. Dambar protrusions shall not exceed 0.010 inch (0.25mm).
9. N is the maximum number of terminal positions.
10. Corner leads (1, N, N/2 and N/2 + 1) for E8.3, E16.3, E18.3, E28.3, E42.6 will have a B1 dimension of 0.030 - 0.045 inch (0.76 - 1.14mm).

E8.3 (JEDEC MS-001-BA ISSUE D)

8 LEAD DUAL-IN-LINE PLASTIC PACKAGE

SYMBOL	INCHES		MILLIMETERS		NOTES
	MIN	MAX	MIN	MAX	
A	-	0.210	-	5.33	4
A1	0.015	-	0.39	-	4
A2	0.115	0.195	2.93	4.95	-
B	0.014	0.022	0.356	0.558	-
B1	0.045	0.070	1.15	1.77	8, 10
C	0.008	0.014	0.204	0.355	-
D	0.355	0.400	9.01	10.16	5
D1	0.005	-	0.13	-	5
E	0.300	0.325	7.62	8.25	6
E1	0.240	0.280	6.10	7.11	5
e	0.100 BSC		2.54 BSC		-
e_A	0.300 BSC		7.62 BSC		6
e_B	-	0.430	-	10.92	7
L	0.115	0.150	2.93	3.81	4
N	8		8		9

Rev. 0 12/93

© Copyright Intersil Americas LLC 2010-2015. All Rights Reserved.
All trademarks and registered trademarks are the property of their respective owners.

For additional products, see www.intersil.com/en/products.html

Intersil products are manufactured, assembled and tested utilizing ISO9001 quality systems as noted in the quality certifications found at www.intersil.com/en/support/qualandreliability.html

Intersil products are sold by description only. Intersil may modify the circuit design and/or specifications of products at any time without notice, provided that such modification does not, in Intersil's sole judgment, affect the form, fit or function of the product. Accordingly, the reader is cautioned to verify that datasheets are current before placing orders. Information furnished by Intersil is believed to be accurate and reliable. However, no responsibility is assumed by Intersil or its subsidiaries for its use; nor for any infringements of patents or other rights of third parties which may result from its use. No license is granted by implication or otherwise under any patent or patent rights of Intersil or its subsidiaries.

For information regarding Intersil Corporation and its products, see www.intersil.com

Package Outline Drawing

M8.15

8 LEAD NARROW BODY SMALL OUTLINE PLASTIC PACKAGE

Rev 4, 1/12

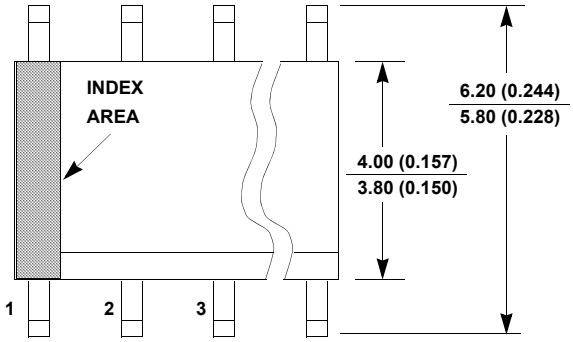

TOP VIEW

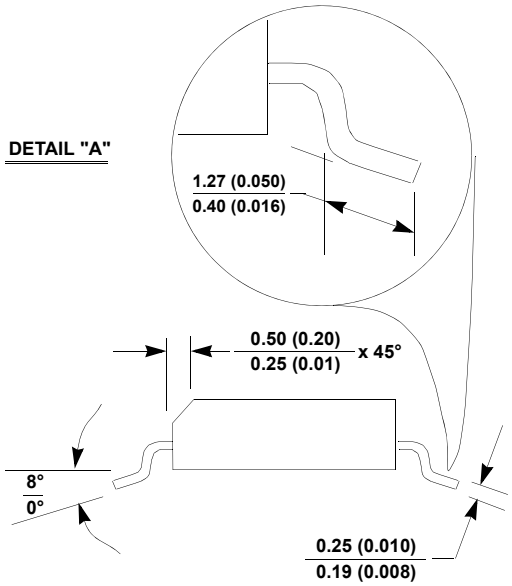

SIDE VIEW “B”

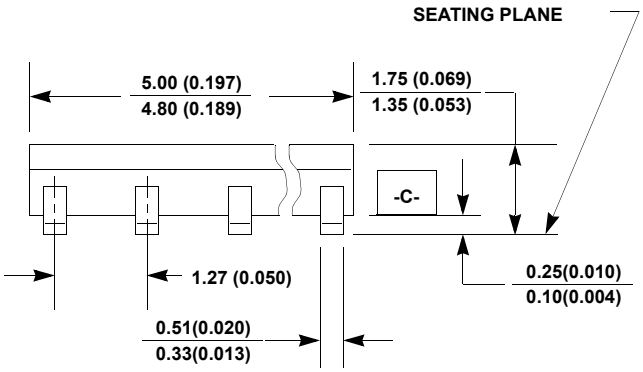

SIDE VIEW “A”

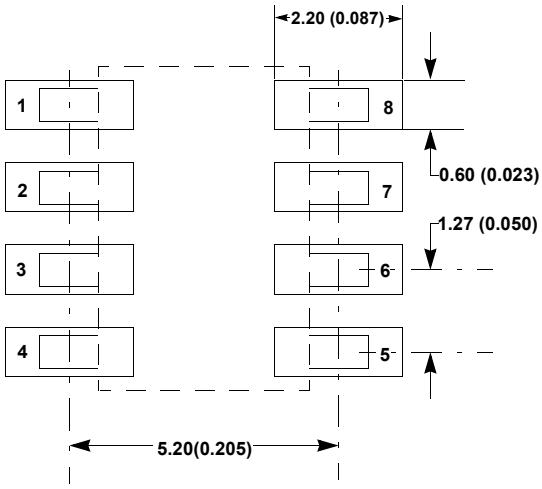

TYPICAL RECOMMENDED LAND PATTERN

NOTES:

1. Dimensioning and tolerancing per ANSI Y14.5M-1994.
2. Package length does not include mold flash, protrusions or gate burrs. Mold flash, protrusion and gate burrs shall not exceed 0.15mm (0.006 inch) per side.
3. Package width does not include interlead flash or protrusions. Interlead flash and protrusions shall not exceed 0.25mm (0.010 inch) per side.
4. The chamfer on the body is optional. If it is not present, a visual index feature must be located within the crosshatched area.
5. Terminal numbers are shown for reference only.
6. The lead width as measured 0.36mm (0.014 inch) or greater above the seating plane, shall not exceed a maximum value of 0.61mm (0.024 inch).
7. Controlling dimension: MILLIMETER. Converted inch dimensions are not necessarily exact.
8. This outline conforms to JEDEC publication MS-012-AA ISSUE C.