THIS DRAWING IS UNPUBLISHED. RELEASED FOR PUBLICATION 20
© COPYRIGHT 20 BY - ALL RIGHTS RESERVED.

REVISIONS

P	LTR	DESCRIPTION	DATE	DWN	APVD
	A	INITIAL	11APR2017	BS	CW

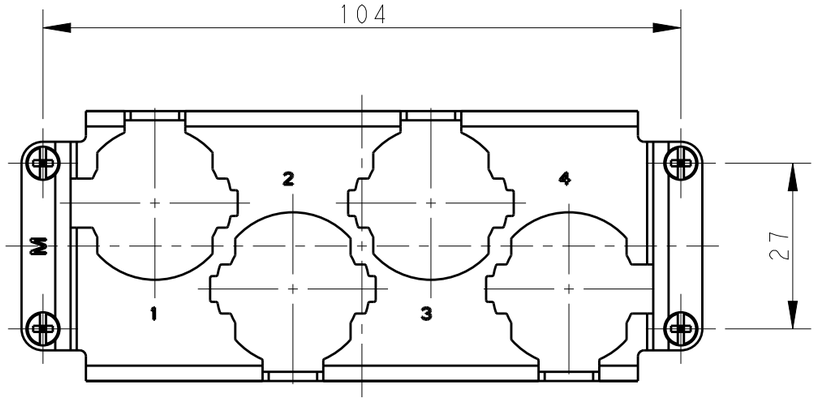

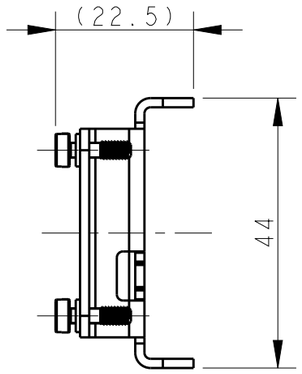

NOTES:

TECHNICAL CHARACTERISTICS:
FRAME MATERIAL: STAINLESS STEEL
NUMBER OF MODULES: 4

注释：

技术参数：
框架材料： 不锈钢
模块数量： 4

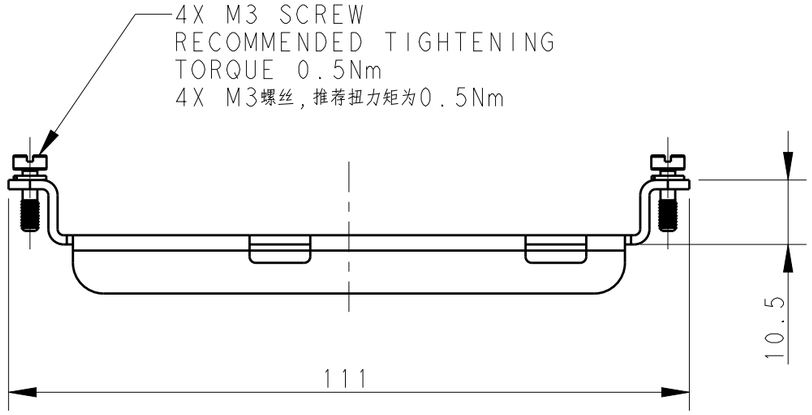

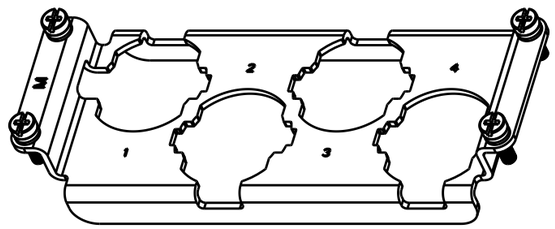

PART NUMBER 料 号	PART DESCRIPTION 描 述	
T0924049044-100	H24BPR-4P-250-M-FRAME	H24BPR-4P-250 MALE FRAME H24BPR-4P-250 公框架

THIS DRAWING IS A CONTROLLED DOCUMENT.

DIMENSIONS: mm

TOLERANCES UNLESS OTHERWISE SPECIFIED:
0 PLC ±-
1 PLC ±-
2 PLC ±-
3 PLC ±-
4 PLC ±-
ANGLES ±-

MATERIAL - -
FINISH - -

DWN BELL SU 11APR2017
CHK GINO YAO 11APR2017
APVD CHRIS WANG 11APR2017
PRODUCT SPEC -
APPLICATION SPEC -
WEIGHT -

TE Connectivity

NAME H24BPR-4P-250-M-FRAME

SIZE	CAGE CODE	DRAWING NO	RESTRICTED TO
A3	-	C-T0924049044100	-

CUSTOMER DRAWING | SCALE 1:1 | SHEET 1 OF 1 | REV A

1470-19 (3/13)