INTELLIGENT POWER®

for Mobile Communications

O2Micro®
Breathing Life into Mobility

Mobile Communications Product Guide

Part Number	Description	Package(s) Available (Lead-free)	Page No.
Power Management ICs			
OZ8070A	USB Protection IC and Battery Charger	20 QFN	7
OZ8618	Battery Charge Controller with Power Selector	24 QFN	8
OZ8681	SMBus Level 2 Battery Charger	16 QFN	9
OZ8682	SMBus Level 2 Battery Charger with Hybrid Power Boost	16 QFN	10
OZ8770/1	Cool Charge® with Adapter Power Recognition Function	24 QFN	11
OZ8778	Cool Charge® Controller with Controlled Adapter Power	24 QFN	12
OZ8806	Monitor + High Accuracy Coulomb Counter	10 DFN	13
OZ522	Charger + DC/DC PMU	20 SSOP	14
DC/DC Converter Controllers			
OZ8033	3A Low Dropout Linear Regulator	8 E-SOP	15
OZ8013	3A Synchronous DC/DC Regulator	16 QFN	16
OZ8111	Ultra High Efficiency DC/DC	16 QFN	17
OZ8116/ OZ8138	Single Ultra High Efficiency DC/DC / Dual Ultra High Efficiency DC/DC	16 QFN/ 24 QFN	18
OZ8150	Single Ultra High Efficiency DC/DC with 5V Regulator and Switch-Over	16 QFN	19
OZ8153	Dual Ultra High Efficiency DC/DC with 5V Regulator and Switch-Over	24 QFN	20
OZ8155	Dual Ultra High Efficiency DC/DC with 5V Regulator and Switch-Over	28 QFN	21
OZ812	DDR/DDR2/DDR3 Integrated Power Supply	24 QFN	22
OZ838	Dual Phase Ultra High Efficiency DC/DC for AMD Mobile Processors	32 QFN	23
OZ8380A	Dual Phase Ultra High Efficiency DC/DC for AMD Mobile Processors	32 QFN	24

Mobile Communications Product Guide

Part Number	Description	Package(s) Available (Lead-free)	Page No.
DC/DC Converter Controllers (cont.)			
0Z838E	Dual Phase Ultra High Efficiency DC/DC for AMD Mobile Processors	24 and 28 QFN	25
0Z8390E	Single Phase Ultra High Efficiency DC/DC for AMD Mobile Processors	20 and 24 QFN	26
0Z8290	Precision DC/DC for Intel® CPU	32 QFN	27
0Z8291	Precision DC/DC, IMVP-6+ Compliant	32 QFN	28
0Z8292	Precision DC/DC, IMVP-6+ and 6.5 Compliant	40 QFN	29
0Z8296	1 + 1 Phase DC/DC for Intel CPU	32 QFN	30
0Z8293	2 + 1 Phase DC/DC for Intel CPU	40 QFN	31
0Z8321	2 + 1 Phase DC/DC for AMD CPU	40 QFN	32
0Z8322	2 + 2 Phase DC/DC for AMD CPU	40 QFN	33
0Z8002	Dual Channel MOSFET Driver	16 QFN	34
LED Backlight Controller ICs for Small-size LCD Panels			
0Z521	Boost Converter Controller	8 E-SOP and SOP	35
0Z532	Compact LED Driver	8 DFN	36
0Z9956B	Six String LED Controller	20 QFN	37
0Z9956E	Six String LED Driver Controller	20 QFN	38
0Z9960	High Power LED Controller	12 DFN, 16 SSOP	39
0Z9979	Six String LED Controller with Phase-Shift Dimming, Internal MOSFET	20 QFN	40
0Z9993	Low Cost White LED Controller	SOT23-6L	41
LED Backlight Controller ICs for AUTOMOTIVE/CAR TV/GPS/PND Applications			
0Z523	Step Down DC/DC Converter	8 SOP	42
0Z524	Step Down 3A DC/DC Converter	8 E-SOP	43

Mobile Communications Product Guide

Part Number	Description	Package(s) Available (Lead-free)	Page No.
LED Backlight Controller ICs for AUTOMOTIVE/CAR TV/GPS/PND Applications			
OZ526	White LED Controller	12 DFN	44
OZ527	Automotive GPS LED Controller	24 E-TSSOP, QFN	45
OZ528	LCD Bias Supply Controller	28 E-TSSOP, QFN, SOP	46
OZ9960	High Power LED Controller	12 DFN, 16 SSOP	39
OZ9961	Six String LED Controller	20 E-TSSOP, SSOP	47
OZ9965	LED Controller + 2 – DC/DC	28 E-TSSOP	48
OZ9990	Four String, High Power, Buck/Boost LED Driver	24 E-TSSOP	49
OZ9993	Low Cost White LED Controller	SOT23-6L	41
OZ9998A	Eight String, High Power LED Controller	24 E-TSSOP, QFN, SOP	50

Mobile Communications

Mission Statement

Be the industry leader in Mobile Communication solutions for efficient, highly integrated, power management ICs.

PRODUCTS

O_2Micro's *Intelligent Power for Mobile Communications* solutions empower **Power Management, DC/DC Converter Controller** and **Lighting** IC products.

Power Management ICs include highly integrated, mixed signal Battery Chargers, Battery Monitors, and DC/DC Converter Controllers designed to provide next generation, safe battery management.

DC/DC Converter Controller ICs are driven by Constant-Ripple-Current® technology, and are specially developed to design high efficiency power supplies.

Lighting ICs are part of the *Intelligent Lighting* family that include highly efficient backlight solutions for mobile communications applications.

OZ8070A
USB Protection IC and Battery Charger

FEATURES

- USB-powered switching charger
- Dynamically allocates input power, first to the system and then to charging
- Integrated power MOSFET transistors; and USB 2.0 compliant
- 0.5A charging current when powered from USB 2.0 hub (up to 0.96A capability from AC adapter)
- Protection includes: input over-voltage (6V) and under-voltage (4V), charger over-voltage, and thermal trip point 150°C
- Microcontroller controlled input current limits
- V_{IN} from 4.0V to 5.5V in operation
- Withstands up to 16V input voltage surge
- Supports battery voltage up to 8.8V
- Final charging voltage (CV mode) settable in the range of 8.0V to 8.8V
- Adjustable frequency from 500kHz to 2MHz

GENERAL DESCRIPTION

OZ8070A is a USB 2.0 compliant power IC assuring 2 cell Lithium Ion (Li-Ion) battery charging; and protection of both the battery and USB upstream and downstream power bus.

When OZ8070A is connected to a USB port and not enabled, it takes, at most, 300µA. Once enabled, it wakes up and limits the current taken from the USB port at the set limit. Then the guest system's controller performs the handshake with the host, and sets the current limit by correspondingly asserting the digital command inputs B0 and B1.

APPLICATIONS

- Camcorder, DSLR, DSC
- USB-powered Devices

APPLICATION DIAGRAM

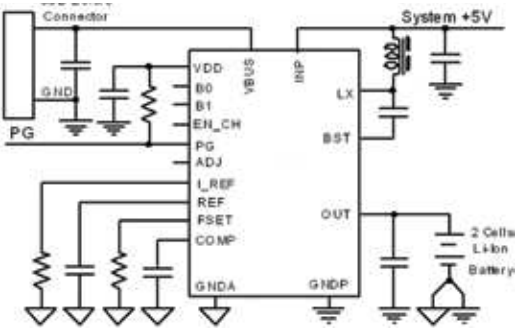

U.S. Patent #'s 6,246,215; 6,326,771; 7,615,965; and more patents pending.

OZ8618

Battery Charge Controller with Selector

FEATURES

- Battery Charge Controller with NMOS system power selector
- NMOS synchronous Buck Converter topology
- Programmable wake-up current and voltage threshold
- High efficiency of (>95%)
- ±0.5% constant voltage, ±5% charging current, and ±5% input current limiting accuracies
- Outputs charging and adapter current information for monitoring
- Analog inputs to program charging current, charging voltage, and adapter current limit
- Dynamic AC adapter current allocation for maximum charging rate
- Protection includes: built-in adapter and battery under-voltage, short circuit, over-voltage, and over-current
- Built-in protection for operation at low charging current
- Automatic AC Adapter voltage detection
- Easy interface with a microcontroller
- Charges batteries of various chemistries, including Li-Ion with 2, 3, and 4 cells

GENERAL DESCRIPTION

OZ8618 is a high performance battery charge controller with adapter and charging current sensing, programmable wake-up, and the required logic and drivers to manage the NMOS system's power path. It can operate as a stand-alone charger or under the supervision of a host microcontroller. It provides complete battery charging control for single battery portable systems. Multiple battery configurations may also be implemented with OZ8618 using a discrete battery selector.

OZ8618 uses two high-side current sensors. When charging with the system ON, it dynamically allocates all remaining AC adapter current not used by the system to the charger, achieving the shortest possible charging time.

APPLICATIONS

- Notebook/Netbook Computer
- Ultra Mobile Computers

APPLICATION DIAGRAM

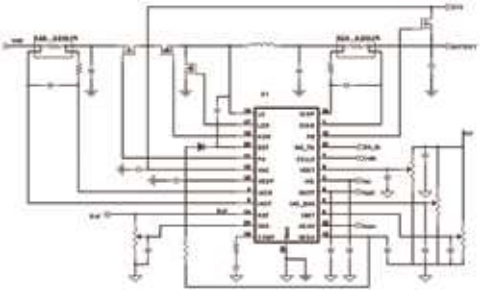

U.S. Patent #'s 6,498,461; 6,611,129; 6,861,823; 7,202,634; and more patents pending.

OZ8681
SMBus Level 2 Battery Charger

FEATURES

- NMOS synchronous topology with fixed frequency and >95% efficiency
- ±0.5% battery voltage, ±3% charging current, and ±3% adapter current accuracies
- Simplified SMBus control of battery voltage, charge current and adapter input current
- 11-bit DAC battery voltage setting (1.024V – 19.200V)
- 6-bit DAC charge current setting (128mA – 8.064A)
- 6-bit DAC adapter current setting (256mA – 11.008A)
- Space-saving 16-pin QFN
- Automatic AC Adapter voltage detection
- Outputs valid adapter presence
- Outputs adapter current/battery discharge current
- Protection includes: built-in battery over-voltage, over-current, reverse connection, and embedded thermal shutdown
- Charges batteries of various chemistries, including Li-Ion with 1 to 4 cells

GENERAL DESCRIPTION

OZ8681 is a highly integrated, SMBus programmable, multi-chemistry battery charge controller. It is intended to be used as a smart battery charger (SBC) within a smart battery system (SBS). It provides complete battery charging control for single battery portable computer systems.

OZ8681 use two high-side current sensors. When charging with the system ON, OZ8681 dynamically allocates all remaining AC adapter current not used by the system to the charger, achieving the shortest possible charging time.

APPLICATIONS

- Notebook/Netbook Computer
- Ultra Mobile Computers

APPLICATION DIAGRAM

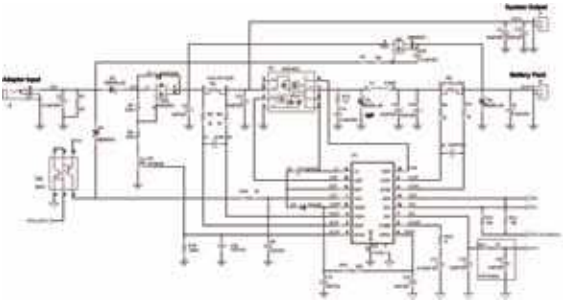

U.S. Patent #'s 6,498,461; 6,611,129; 6,861,823; 7,202,634; and more patents pending.

OZ8682

SMBus Level 2 Battery Charger with Hybrid Power Boost

FEATURES

- Hybrid Power Boost feature allows battery to provide power in parallel with the AC adapter
- NMOS synchronous topology with fixed frequency and >95% efficiency
- ±0.5% battery voltage, ±3% charging current, and ±3% adapter current accuracies
- Simplified SMBus control of battery voltage, charge current and adapter input current
- 11-bit DAC battery voltage setting (1.024V – 19.200V)
- 6-bit DAC charge current setting (128mA – 8.064A)
- 6-bit DAC adapter current setting (256mA – 11.008A)
- Space-saving 16-pin QFN
- Automatic AC Adapter voltage detection
- Outputs valid adapter presence
- Outputs adapter current/battery discharge current
- Protection includes: built-in battery over-voltage, over-current, reverse connection, and embedded thermal shutdown
- Charges batteries of various chemistries, including Li-Ion with 1 to 4 cells

GENERAL DESCRIPTION

OZ8682 is a highly integrated, SMBus-programmable, multi-chemistry battery charge controller with a hybrid power boost feature. It is intended to be used as a smart battery charger (SBC) within a smart battery system (SBS), providing complete battery charging control for single battery portable computer systems.

OZ8682 uses two high-side current sensors. When charging with the system ON, OZ8682 dynamically allocates all remaining AC adapter current not used by the system to the charger, achieving the shortest possible charging time.

APPLICATIONS

- Notebook/Netbook Computer
- Ultra Mobile Computers

APPLICATION DIAGRAM

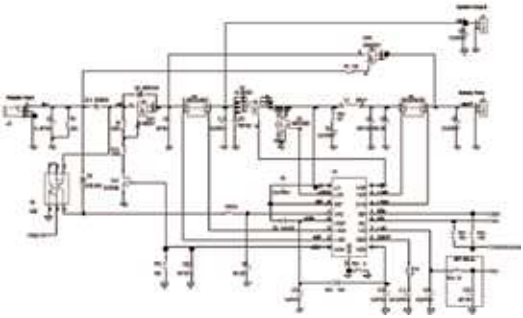

U.S. Patent #'s 6,498,461; 6,611,129; 6,861,823; 7,202,634; 7,719,236; and more patents pending.

OZ8770/1

Cool Charge® with Adapter Power Recognition

FEATURES

- Supports Intel® AMPS hybrid power topology for Li-Ion batteries
- Provides 0.7% accuracy in constant voltage (CV) charge mode
- Automatic AC adapter detection
- Analog inputs to program charging current, charging voltage, maximum adapter power, and wake-up threshold
- Dynamic AC adapter power allocation for maximum charge rate
- Power-saving mode available when system is battery powered
- Digital and analog or digital wake-up current function
- Wake-up current internally set
- Battery current information
- Integrated power selector for single battery systems
- Protection for adapter wire control connection failure
- Battery over-voltage and over-current protection
- Safely manages power emergencies to assure system power integrity
- Easy interface with a microcontroller

GENERAL DESCRIPTION

OZ8770/1 is an adapter controller for single Li-Ion battery systems. It provides complete adapter control for single battery portable electronic devices, as well as the selection of power source and charging path by driving P-channel power MOSFET switches.

OZ8770/1 uses two high-side current sensors. One current sensor measures the AC adapter current; the other one measures the charging current. When the adapter power limit is reached during charging, OZ8770/1 dynamically reduces the charging current in order to keep the adapter power below the limit, while continuing to supply the requested system current.

APPLICATIONS

- Notebook Computer and other Portable Electronic Devices

APPLICATION DIAGRAM

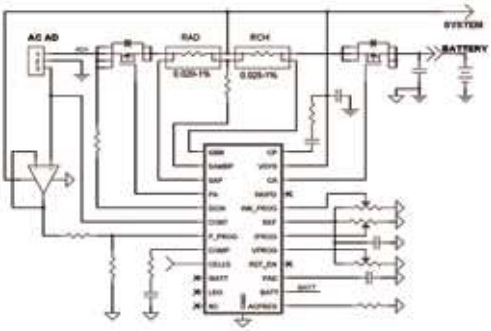

U.S. Patent #'s 6,246,215; 6,326,771; 6,472,897; 6,720,800; 6,741,066; 6,882,214; 7,088,076; 7,126,241; 7,319,346; 7,436,222; 7,622,830; 7,719,236; 7,777,463; 7,994,660; 8,049,471; and more patents pending.

OZ8778

Cool Charge® Controller with Controlled Adapter Power

FEATURES

- Supports Intel® AMPS topology for Li-Ion batteries with O_2Micro's Cool Charge® Technology
- Charges Li-Ion batteries with 2, 3, and 4 cells
- Provides ±0.5% constant voltage and ±2.5% charging current accuracies
- Supports hybrid power mode
- Programmable wake-up current and power dissipated on battery switch
- Outputs battery current and adapter power information
- Analog inputs to program charging current, charging voltage, and wake-up voltage threshold
- Supports battery conditioning mode (learning mode) with the "Smart Guy feature"
- Dynamic AC adapter power allocation for maximum charge rate
- Power-saving mode when powered by battery
- Integrated power source selector for single battery systems
- Automatic AC adapter presence detection
- Protection includes: programmable adapter over-voltage, battery over-voltage and over-current, and adapter control wire connection failure
- Safely manages power emergencies to assure system power integrity
- Easy interface with a microcontroller

GENERAL DESCRIPTION

OZ8778 is a highly integrated, battery Cool Charge controller for single Li-Ion battery portable electronic devices. It uses O_2Micro's Cool Charge topology to remove the standard *charger block* from traditional battery charger architecture.

OZ8778 uses two high-side current sensors – one detects the AC adapter current, the other the charging current. When the programmed adapter power control level is reached during charging, OZ8778 dynamically reduces the charging current to keep the adapter power below the limit, while continuing to supply the system current requested.

APPLICATIONS

- Notebook Computer and other Portable Electronic Devices

APPLICATION DIAGRAM

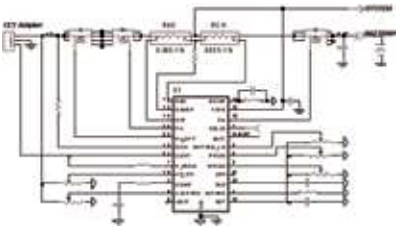

U.S. Patent #'s 6,741,066; 7,088,076; and more patents pending.

OZ8806

Monitor + High Accuracy Coulomb Counter

FEATURES

- Efficient Smart Phone battery monitor and high accuracy Coulomb Counter for 1-2 cell batteries
- Monitors:
  - Battery voltage
  - Temperature
  - Current for coulomb counting and battery gauge
- Resides in either the Host or the Battery Pack
- Supports I^2C communication protocol
- OCV (Open Circuit Voltage) detection when chip is in start-up and sleep modes
- Low power consumption

GENERAL DESCRIPTION

OZ8806 is a single cell battery monitor chip that works either in the battery pack or host. It provides current-flow, voltage, and temperature measurement data to support battery capacity monitoring in cost-sensitive applications.

Current measurement and coulomb counting are accomplished by monitoring the voltage drop across an external sense resistor. Voltage measurement is accomplished through a separate voltage-sense input. Two GPIOs may be used to detect battery temperature or for other purposes.

APPLICATIONS

- Netbook Computer
- Tablet
- Smart Phone
- PDA
- Cell Phone
- Handheld Rechargeable Battery

APPLICATION DIAGRAM

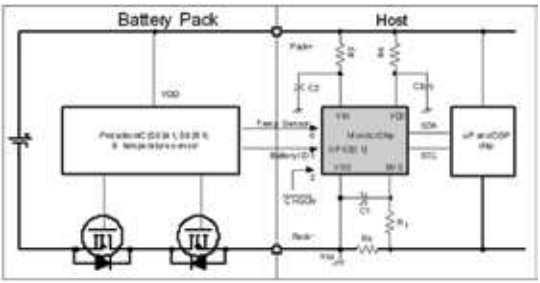

U.S. Patent #'s 6,744,394; 7,095,211; 7,161,520; 7,196,652; 7,218,083; 7,557,540; and more patents pending.

OZ522
Charger + DC/DC PMU

FEATURES

Charger

- 550KHz switching mode charger for 1 – 4 cell Li-Ion or Li-Polymer batteries
- Supports fast charge mode
- Wake up charging function for discharged batteries
- Built-in charge termination function
- Internal safety timer for charger
- 92% efficiency
- Automatic battery recharge
- 1% constant voltage accuracy
- Charge status indication by LED
- Battery absence detection

DC/DC Converters

- Two switch mode buck converters with under-voltage protection
- 2% voltage accuracy
- Output protection:
  - Over-current for each DC/DC converter
  - Over-voltage lockout on adapter voltage
  - Under-voltage lockout on battery voltage
- Output voltage range of 1.0V to 5.5V
- Integrated soft start function, 4ms soft start function at start-up
- ON/OFF control pin

GENERAL DESCRIPTION

The OZ522 provides a complete charging algorithm to control 1 – 4 cell Li-Ion batteries, used in Portable DVD (PDVD), and other portable electronic equipment. It delivers a wake-up charging current for discharged batteries followed by a fast charging current to minimize the charging time, and keeps the battery regulation voltage with 1% accuracy. A battery temperature sensing scheme allows the battery to be charged within a user-defined temperature range. The switch mode charger allows use of low AC adapter voltage at high efficiency.

APPLICATIONS

- PDVD

APPLICATION DIAGRAM

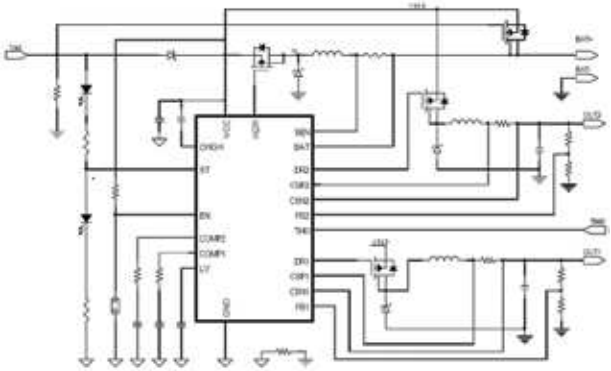

U.S. Patent #'s 7,268,520; 7,977,911; and more patents pending.

OZ8033

3A Low Dropout Linear Regulator

FEATURES

- Ultra low dropout (LDO) regulator
- 170mV dropout
- 1.5% Accuracy over Line/Load/Temperature
- Fast load Transient Response
- Internal soft start function
- Protection includes: Over-current (OCP), Output Under-voltage (UVP), Under-voltage Lockout (UVLO) for VDDA and VIN, and Over-temperature (OTP)

GENERAL DESCRIPTION

OZ8033 is a fast, high current, and ultra low dropout (LDO) regulator designed for DSP Core, front side bus VTT and other similar applications.

The device uses two power supplies: VIN and VDDA. VIN is the main supply providing the output current; VDDA is an auxiliary supply for all other internal circuitry. The voltages of both power supplies are internally monitored by the UVLO circuitry, which disables the chip when any of these voltages is lower than the safe operation threshold.

APPLICATIONS

- Notebook Computer
- Industrial Computer
- Automotive Infotainment
- FPGA
- DSP Core and I/O Voltage
- Front Side Bus VTT
- Motherboard

APPLICATION DIAGRAM

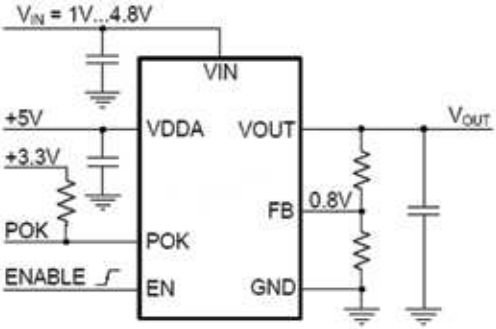

U.S. Patent #8,143,872; and more patents pending.

OZ8013
3A Synchronous DC/DC Regulator

FEATURES

- 3A synchronous DC/DC controller with integrated MOSFETs
- Constant-Ripple-Current® (CRC) control allows designing for optimum inductor size
- High efficiency up to 94%; High light load efficiency of >85% at 10mA
- VREF accuracy of 1.5%
- Input voltage from 2.7V to 5.5V; Output voltage adjustable from 0.5V to 3.3V
- Output current up to 3A
- User-adjustable operating frequency
- Dynamic voltage change support; and Voltage feed-forward compensation
- Output Protection: latched over-voltage and under-voltage, Valley type over-current, and over-temperature
- Input Protection: under-voltage lockout on VDDA and VIN
- Power Good and ON/SKIP signals
- Soft start with OCT protection

GENERAL DESCRIPTION

OZ8013 steps down the input voltage to low output voltages in the range of 0.5V to 3.3V. High efficiency, DC accuracy and excellent transient response make OZ8013 the perfect choice to supply low power CPU peripherals, chipset cores, and low power graphics processors.

OZ8013's voltage feed-forward compensation ensures high rejection of input voltage transients, typically occurring when the AC adapter is plugged in or removed.

APPLICATIONS

- Power Supplies for Notebook Peripherals and POL

APPLICATION DIAGRAM

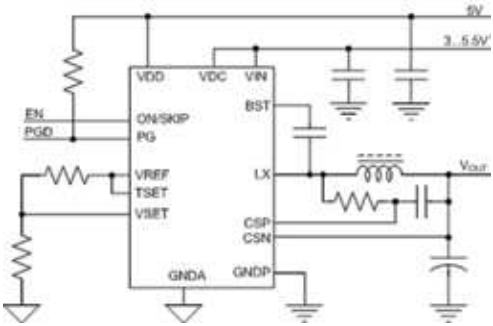

U.S. Patent #'s 6,844,710; 6,965,221; 7,098,642; 7,202,650; 7,598,718; 7,816,896; and more patents pending.

OZ8111
Ultra High Efficiency DC/DC

FEATURES

- DC/DC SMPS Controller with integrated drivers
- CRC control allows designing for optimum inductor size
- High efficiency up to 94%; High light load efficiency of >85% at 100mA
- VREF accuracy of 1.5%
- Input voltage from 3V to 25V; Output voltage adjustable from 0.5V to 2.75V
- Output current up to 30A
- User-adjustable operating frequency
- Enhanced dynamic voltage change support; and Voltage feed-forward compensation
- Output Protection: latched over-voltage and under-voltage, and Valley type over-current
- Input Protection: under-voltage lockout on VDDA and VIN
- Power Good and ON/SKIP signals
- Soft start at start-up with OCT protection
- Soft stop at shutdown

GENERAL DESCRIPTION

OZ8111 is a DC/DC controller providing power control for peripherals and chipsets. It steps down the high battery voltage to low output voltages in the range of 0.5V to 2.75V. High efficiency, DC accuracy and excellent transient response make OZ8111 the perfect choice to supply low voltage CPU peripherals, chipset cores, and graphics processors.

OZ8111's voltage feed-forward compensation ensures high rejection of input voltage transients, typically occurring when the AC adapter is plugged in or removed.

APPLICATIONS

- Power Supplies for Notebook Peripherals

APPLICATION DIAGRAM

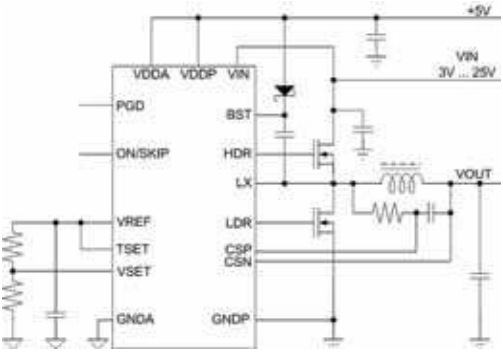

U.S. Patent #'s 6,844,710; 6,965,221; 7,098,642; 7,202,650; 7,466,113; 7,598,718; 7,816,896; and more patents pending.

OZ8116/8138

Single/Dual Ultra High Efficiency DC/DC

FEATURES

- **OZ8116**: Single DC/DC SMPS controller with integrated drivers
- **OZ8138**: Dual DC/DC SMPS controller with integrated drivers
- CRC control allows designing for optimum inductor size
- High efficiency up to 94%; High light load efficiency >85% at 100mA
- VREF accuracy of 1.5%
- Input voltage from 3V to 25V; Output voltage adjustable from 0.5V to 2.75V
- Output current – up to 15A
- Output protection: latched over-voltage and under-voltage, and over-current
- Input protection: under-voltage lockout on VDDA and VIN
- Soft start at start-up
- Soft stop at shutdown

GENERAL DESCRIPTION

OZ8116/8138 are DC/DC Switched Mode Power Supply (SMPS) controllers specially developed to provide power control for next generation microprocessors, their peripherals and chipsets.

These ICs step down the high battery voltage to low output voltages in the range of 0.5V to 2.75V. High efficiency, DC accuracy and excellent transient response make OZ8116/8138 the perfect choice to supply low voltage CPU peripherals, chipset cores, and graphics processors.

APPLICATIONS

- Power Supplies for Notebook CPU, Microcontrollers and Peripherals
- Industrial Computer
- GPS

APPLICATION DIAGRAMS

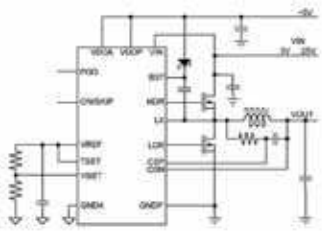

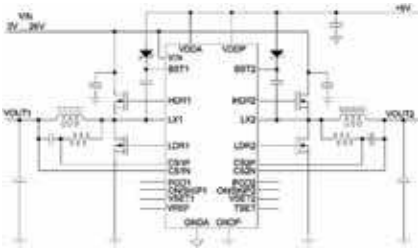

U.S. Patent #'s 6,844,710; 6,965,221; 7,098,642; 7,202,650; 7,466,113; 7,598,718; 7,816,896; and more patents pending.

OZ8150

Single Ultra High Efficiency DC/DC with 5V Regulator and Switch-Over

FEATURES

- Single DC/DC SMPS controller with integrated drivers, 5V/100mA and 3.3V/20mA LDOs
- CRC controller allows designing for optimum inductor size
- Integrated boost diode
- High full load efficiency up to 94%; High light load efficiency of >85% at 100mA
- V_{OUT} accuracy of 1% or better
- Input voltage from 4.5V to 24V
- Output voltage adjustable from 1V to 5.5V, and preset function 3.3V and 5V
- Output current up to 15A
- LDO bootstrap switch-over if V5SO > 4.7V ; and Power Good open drain output
- Soft start at start-up; Soft stop at shutdown
- Voltage feed-forward compensation; and User-adjustable operating frequency
- Enhanced dynamic voltage change support; and Non-audio skip mode
- Output Protection: latched over-voltage and under-voltage, and Valley type over-current
- Input Protection: under-voltage lockout on VDDA

GENERAL DESCRIPTION

OZ8150 steps down the high battery voltage to low output voltages in the range of 1.0V to 5.5V. High efficiency, DC accuracy, and excellent transient response make OZ8150 suitable to supply low voltage CPU peripherals, chipset cores, and graphics processors.

OZ8150's voltage feed-forward compensation ensures high rejection of input voltage transients, typically occurring when the AC adapter is plugged in or removed.

APPLICATIONS

- Power Supplies for Notebook Peripherals and POL

APPLICATION DIAGRAM

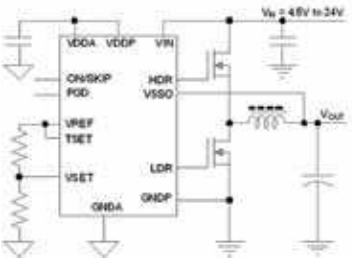

U.S. Patent #'s 6,844,710; 6,965,221; 7,098,642; 7,202,650; 7,466,113; 7,598,718; 7,816,896; 8,143,872; and more patents pending.

OZ8153

Dual Ultra High Efficiency DC/DC with 5V Regulator and Switch-Over

FEATURES

- Dual DC/DC SMPS controller with integrated drivers, 5V/150mA and 3.3V/20mA LDOs
- Two CRC controllers; and Integrated boost diodes
- High full load efficiency up to 94%; High light load efficiency of >85% at 100mA
- V_{OUT} accuracy of 1% or better
- Input voltage from 5.5V to 24V
- Output voltage adjustable from 1V to 5.5V; and presets on both channels
- Output load current up to 15A
- LDO bootstrap switch-over if V5SO > 4.7V
- Independent ON/SKIP signals; and Power Good open drain output
- Soft start at start-up; Soft stop at shutdown
- Voltage feed-forward compensation; and User-adjustable operating frequency
- Dynamic voltage change support; and Non-audio skip mode
- Output Protection: latched over-voltage and under-voltage, and Valley type over-current
- Input Protection: under-voltage lockout on VDDA and VIN

GENERAL DESCRIPTION

OZ8153 steps down the high battery voltage to low output voltages in the range of 1.0V to 5.5V. High efficiency, DC accuracy, and excellent transient response make OZ8153 suitable to supply the main system voltages (5V and 3.3V) to the CPU peripherals, chipset cores, and graphics processors.

OZ8153's voltage feed-forward compensation ensures high rejection of input voltage transients, typically occurring when the AC adapter is plugged in or removed.

APPLICATIONS

- Power Supplies for Notebook CPUs and Peripherals

APPLICATION DIAGRAM

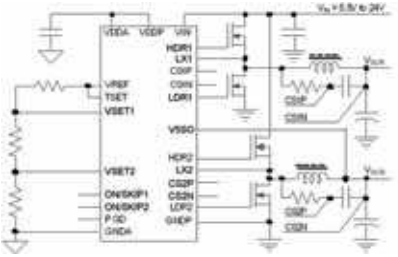

U.S. Patent #'s 6,844,710; 6,965,221; 7,098,642; 7,202,650; 7,466,113; 7,598,718; 7,816,896; 8,143,872; and more patents pending.

OZ8155

Dual Ultra High Efficiency DC/DC with 5V Regulator and Switch-Over

FEATURES

- Dual DC/DC SMPS controller with integrated drivers, and 5V/150mA LDOs
- Two CRC controllers; and Integrated boost diodes
- High full load efficiency up to 94%; High light load efficiency of >85% at 100mA
- V_{OUT} accuracy of 1% or better
- Input voltage from 5.5V to 24V
- Output voltage adjustable from 1V to 5.5V; and presets on both channels
- Output current up to 15A
- LDO bootstrap switch-over if V5SO > 4.7V
- Independent ON/SKIP signals, and Power Good open drain outputs
- User-adjustable soft start slew at start-up; Soft stop at shutdown
- Voltage feed-forward compensation; and User-adjustable operating frequency
- Dynamic voltage change support; and Non-audio skip mode
- Output Protection: latched over-voltage and under-voltage, and Valley type over-current
- Input Protection: under-voltage lockout on VDDA and VIN

GENERAL DESCRIPTION

OZ8155 steps down the high battery voltage to low output voltages in the range of 1.0V to 5.5V. High efficiency, DC accuracy, and excellent transient response make OZ8155 suitable to supply low voltage CPU peripherals, chipset cores, and graphics processors.

At start-up, OZ8155's output voltage ramps up in a controlled manner with a user-adjustable slew rate. At shutdown, the output voltage is ramped down in a controlled manner with the same slew rate.

APPLICATIONS

- Power Supplies for Notebook CPUs and Peripherals

APPLICATION DIAGRAM

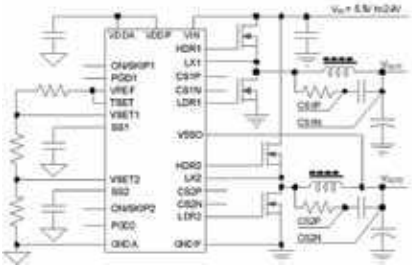

U.S. Patent #'s 6,844,710; 6,965,221; 7,098,642; 7,202,650; 7,466,113; 7,598,718; 7,816,896; 8,143,872; and more patents pending.

OZ812

DDR/DDR2/DDR3 Integrated Power Supply

FEATURES

- DC/DC SMPS Controller with integrated drivers for VDDQ
- Integrated Linear Regulator with 2A source and sink capability for VTT
- High efficiency, up to 94%; High light load efficiency of >85% at 100mA
- VDDQ accuracy of ±1%
- Input voltage from 3V to 30V
- Output voltage: Preset values at 2.5V or 1.8V, or adjustable from 0.5V to 2.75V
- Output current up to 15A
- Power Good and ON/SKIP signals
- Soft start and Soft stop
- CRC control allows optimum inductor size
- Dynamic voltage change support; and Voltage feed-forward compensation
- Output Protection: latched over-voltage and under-voltage, and Valley type over-current
- Input Protection: under-voltage lockout on VDDA and VIN

GENERAL DESCRIPTION

OZ812 is a DC/DC controller specially developed to design power supplies for DDR, DDR2 and DDR3 memories. It steps down the high battery voltage to low output voltages in the range of 0.5V to 2.75V and also provides the memory reference VTTREF and termination voltage VTT that accurately tracks VDDQ/2. It is compliant with the DDR, DDR2 and DDR3 specifications.

OZ812's voltage feed-forward compensation ensures high rejection of input voltage transients, typically occurring when the AC adapter is plugged in or removed.

APPLICATIONS

- Power Supplies for DDR, DDR2 and DDR3 Memory

APPLICATION DIAGRAM

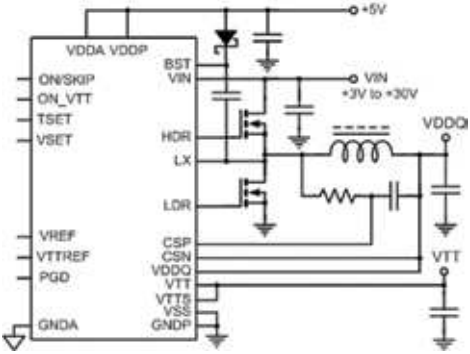

U.S. Patent #'s 6,472,897; 6,720,800; 6,844,710; 6,965,221; 7,098,642; 7,202,650; 7,319,346; 7,391,191; 7,436,222; 7,466,113; 7,598,718; 7,816,896; and more patents pending.

OZ838

Dual Phase Ultra High Efficiency DC/DC for AMD Mobile Processors

FEATURES

- Two independent Single Phase DC/DC controllers for AMD CPU core power planes
- Supports plane strapping (dual phase configuration)
- Integrated drivers; and AMD serial VID code compliant
- CRC control method allows designing for optimum inductor size
- Highly efficient power conversion, and light load conversion via smart pulse skipping mode
- Ultra fast transient recovery; and 1% output voltage accuracy
- Supports up to 36A output current (18A per phase)
- User-adjustable switching frequency and OCP limit
- User-adjustable slew control of VDD_CORE at start-up and OTF VID code changes
- True differential output voltage remote sensing
- Open drain Power Good signal; and Voltage feed-forward compensation
- Protection includes: VIN & VDDA under-voltage lockout; latched over-voltage; and cycle-by-cycle over-current

GENERAL DESCRIPTION

OZ838 is a DC/DC controller specifically developed to support power supply designs accepting the AMD Serial VID codes. It incorporates the AMD 7-bit VID table for full range output conversion capability in 12.5mV increments. High efficiency under both light and heavy load conditions, DC accuracy, remote voltage sensing and excellent transient response make OZ838 the solution of choice for low voltage CPU power supplies.

OZ838's voltage feed-forward compensation ensures high rejection of input voltage transients, typically occurring when the AC adapter is plugged in or removed.

APPLICATIONS

- Power Supplies for AMD Notebook CPUs

APPLICATION DIAGRAM

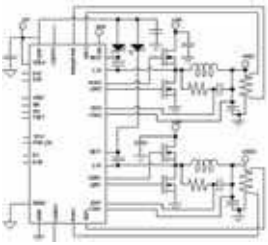

U.S. Patent #'s 6,459,602; 6,472,897; 6,678,178; 6,720,800; 6,813,173; 6,844,710; 6,965,221; 7,002,817; 7,031,174; 7,098,642; 7,202,650; 7,242,598; 7,319,346; 7,436,222; 7,466,113; 7,471,533; 7,598,718; 7,589,987; 7,724,553; 7,816,896; and more patents pending.

OZ8380A

Dual Phase Ultra High Efficiency DC/DC for AMD Mobile Processors

FEATURES

- Two independent Single Phase DC/DC controllers, with integrated drivers, for AMD CPU core power planes
- AMD serial VID code compliant
- CRC control method allows designing for optimum inductor size
- Highly efficient power conversion; and light load conversion via smart pulse skipping mode
- Ultra fast transient recovery; and 1% output voltage accuracy
- Supports more than 18A per channel
- User-adjustable switching frequency and OCP limit
- User-adjustable slew control of VDD_CORE at start-up and OTF VID code changes
- True differential output voltage remote sensing; and Open drain Power Good signal
- Voltage feed-forward compensation
- Protection includes: VIN & VDDA under-voltage lockout, latched over-voltage, and cycle-by-cycle over-current

GENERAL DESCRIPTION

OZ8380A is a DC/DC controller specifically developed to support power supply designs accepting the AMD Serial VID codes. It incorporates the AMD 7-bit VID table for full range output conversion capability in 12.5mV increments. High efficiency under both light and heavy load conditions, DC accuracy, differential remote voltage sensing and excellent transient response make OZ8380A the solution of choice for low voltage CPU power supplies.

OZ8380A's voltage feed-forward compensation ensures high rejection of input voltage transients.

APPLICATIONS

- Power Supplies for AMD Notebook CPUs

APPLICATION DIAGRAM

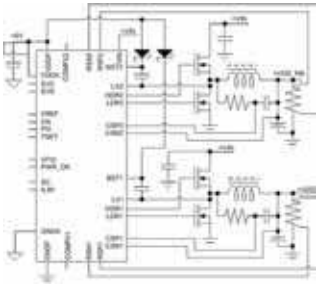

U.S. Patent #'s 6,459,602; 6,472,897; 6,678,178; 6,720,800; 6,813,173; 6,844,710; 6,965,221; 7,002,817; 7,031,174; 7,098,642; 7,202,650; 7,242,598; 7,319,346; 7,436,222; 7,466,113; 7,471,533; 7,589,987; 7,598,718; 7,724,553; 7,816,896; and more patents pending.

OZ838E

Dual Phase Ultra High Efficiency DC/DC for AMD Mobile Processors

FEATURES

- Dual Phase DC/DC controller for AMD
- Integrated drivers, and boost diode
- AMD SVI 7-bit VID code compliant
- CRC control method allows designing for optimum inductor size
- Highly efficient power conversion up to 94%
- Highly efficient light load conversion via smart pulse skipping mode
- Ultra fast transient recovery; and 1% output voltage accuracy
- Supports up to 50A output current
- User-adjustable switching frequency and Dual OCP limit
- User-adjustable slew control of VDD_CORE at start-up and OTF VID code changes
- True differential output voltage remote sensing
- Open drain Power Good signal; VR_TTb signal; and Voltage feed-forward compensation
- Protection includes: VIN & VDDA under-voltage lockout, latched over-voltage, and cycle-by-cycle over-current

GENERAL DESCRIPTION

OZ838E is a DC/DC controller specifically developed to support power supply designs for peripherals of future AMD SVI (Serial Voltage Identification) mobile microprocessors. It incorporates the AMD 7-bit VID table for full range output conversion capability in 12.5mV increments. High efficiency under both light and heavy load conditions, DC accuracy, remote voltage sensing and excellent transient response make OZ838E the solution of choice for low voltage CPU power supplies.

OZ838E's voltage feed-forward compensation ensures high rejection of input voltage transients, typically occurring when the AC adapter is plugged in or removed.

APPLICATIONS

- Power Supplies for AMD Notebook CPUs

APPLICATION DIAGRAM

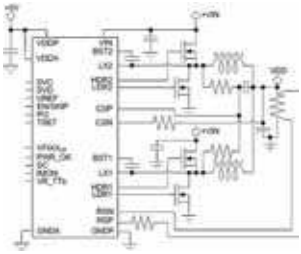

U.S. Patent #'s 6,459,602; 6,472,897; 6,678,178; 6,720,800; 6,813,173; 6,844,710; 6,965,221; 7,002,817; 7,031,174; 7,098,642; 7,202,650; 7,242,598; 7,319,346; 7,436,222; 7,466,113; 7,471,533; 7,589,987; 7,598,718; 7,724,553; 7,816,896; and more patents pending.

OZ8390E

Single Phase Ultra High Efficiency DC/DC for AMD Mobile Processors

FEATURES

- Single Phase DC/DC controller with integrated drivers
- AMD SVI 7-bit VID compliant
- CRC control method allows designing for optimum inductor size
- Highly efficient power conversion (up to 94%)
- Highly efficient light load conversion via smart pulse skipping mode
- Ultra fast transient recovery; and 1% output voltage accuracy
- Supports up to 25A output current
- User-adjustable switching frequency and dual OCP limit
- User-adjustable slew control of Northbridge at start-up and OTF VID code changes
- True differential output voltage remote sensing
- Open drain Power Good and VR_TTb signal; and Voltage feed-forward compensation
- Protection includes: VIN & VDDA under-voltage lockout, latched over-voltage, and cycle-by-cycle over-current

GENERAL DESCRIPTION

OZ8390E is a DC/DC controller specifically developed to support power supply designs for peripherals of future AMD SVI (Serial Voltage Identification) mobile microprocessors. It incorporates the AMD 7-bit VID table for full range output conversion capability in 12.5mV increments. High efficiency under both light and heavy load conditions, DC accuracy, remote voltage sensing and excellent transient response make OZ8390E the solution of choice for low voltage CPU power supplies.

OZ8390E's voltage feed-forward compensation ensures high rejection of input voltage transients.

APPLICATIONS

- Power Supplies for AMD Notebook CPUs

APPLICATION DIAGRAM

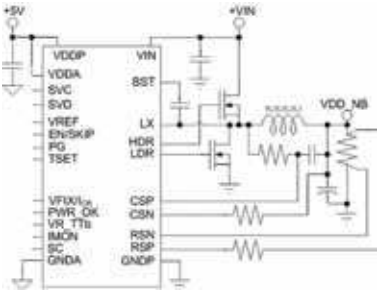

U.S. Patent #'s 6,472,897; 6,720,800; 6,844, 710; 6,882,214; 6,965,221; 7,098,642; 7,202,650; 7,319,346; 7,436,222; 7,466,113; 7,598,718; 7,816,896; and more patents pending.

OZ8290
Precision DC/DC for Intel® CPU

FEATURES

- Single phase controller for Low Voltage (LV) and Ultra Low Voltage (ULV) CPUs
- High efficiency, up to 94%; and Integrated gate drivers and boost diode
- High output voltage accuracy
- 3V to 30V input voltage; and 7-bit VID code and adjustable boot voltage
- Output voltage slew rate controlled at start-up, shutdown, and during VID changes
- Adjustable latched over-voltage and embedded thermal protection
- Cycle-by-cycle over-current protection
- Improved input voltage transient behavior through voltage feed-forward compensation
- CRC operation for improved efficiency over wide load, input and output voltage ranges and optimized inductor value
- Smart pulse skipping feature and audible noise suppression under light load conditions
- True differential output voltage remote sensing

GENERAL DESCRIPTION

OZ8290 is a single phase, high efficiency, PWM buck DC/DC controller with integrated half-bridge drivers. The powerful embedded drivers allow single phase operation, minimizing solution parts count, cost and PCB area.

OZ8290 features patented CRC architecture with superior static and dynamic CORE voltage regulation. A precision reference, remote sensing and CRC architecture assure high output accuracy for all loads and input/output voltages.

APPLICATIONS

- LV and ULV Microprocessor Core Supply

APPLICATION DIAGRAM

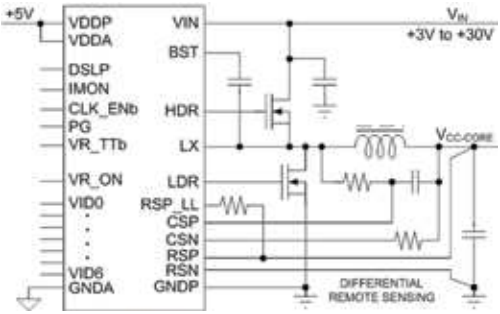

U.S. Patent #'s 6,844,710; 6,965,221; 7,098,642; 7,202,650; 7,466,113; 7,598,718; 7,816,896; and more patents pending.

OZ8291
Precision DC/DC, IMVP-6+ Compliant

FEATURES

- Single phase controller for Low Voltage (LV) and Ultra Low Voltage (ULV) CPUs
- High efficiency, up to 94%; and Integrated gate drivers and boost diode
- High output voltage accuracy
- 3V to 30V input voltage; and 7-bit VID code and adjustable boot voltage
- Output voltage slew rate controlled at start-up, shutdown, and during VID changes
- Adjustable latched over-voltage and embedded thermal protection
- Cycle-by-cycle over-current protection
- Improved input voltage transient behavior through voltage feed-forward compensation
- CRC operation for improved efficiency over wide load, input and output voltage ranges and optimized inductor value
- Smart pulse skipping feature and audible noise suppression under light load conditions
- True differential output voltage remote sensing

GENERAL DESCRIPTION

OZ8291 is a single phase, high efficiency, PWM buck DC/DC controller with integrated half-bridge drivers. It's compliant with the Intel IMVP-6+ specification. The powerful embedded drivers allow single phase operation, minimizing solution parts count, cost and PCB area.

OZ8291 features patented CRC architecture which provides superior static and dynamic CORE voltage regulation. A precision reference, remote sensing and CRC architecture assure high output accuracy for all loads and input/output voltages.

APPLICATIONS

- LV and ULV Microprocessor Core Supply

APPLICATION DIAGRAM

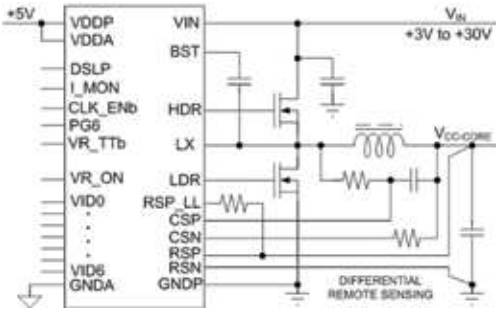

U.S. Patent #'s 6,844,710; 6,965,221; 7,098,642; 7,202,650; 7,466,113; 7,598,718; 7,816,896; and more patents pending.

OZ8292

Precision DC/DC, IMVP-6+ and 6.5 Compliant

FEATURES

- Dual phase controller for Low Voltage (LV) and Ultra Low Voltage (ULV) Intel CPUs
- High efficiency, up to 94%; and Integrated gate drivers and boost switches
- High VCC-CORE accuracy (0.5% from 0.75V to 1.5V)
- 4.5V to 24V input voltage; and 7-bit VID code and user-adjustable boot voltage
- Output voltage slew rate controlled at start-up, shutdown, and during VID changes
- Adjustable latched over-voltage and embedded thermal protection
- Cycle-by-cycle adjustable over-current protection
- Improved input voltage transient behavior through voltage feed-forward compensation
- CRC operation for improved efficiency over wide load, input and output voltage ranges
- Smart pulse skipping feature and audible noise suppression under light load conditions
- True differential output voltage remote sensing

GENERAL DESCRIPTION

OZ8292 is a dual phase, high efficiency, PWM buck DC/DC controller with integrated half-bridge drivers. It's compliant with the Intel IMVP-6 and IMVP-6.5 specifications. The powerful embedded drivers allow dual phase operation, minimizing solution parts count, cost and PCB area.

OZ8292 features patented CRC architecture which provides superior static and dynamic CORE voltage regulation. A precision reference, remote sensing and CRC architecture assure high output accuracy for all loads and input/output voltages.

APPLICATIONS

- LV and ULV Microprocessor Core Supply

APPLICATION DIAGRAM

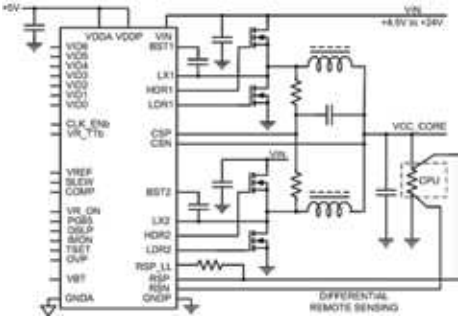

U.S. Patent #'s 6,844,710; 6,965,221; 7,098,642; 7,202,650; 7,466,113; 7,598,718; 7,816,896; and more patents pending.

OZ8296

1 + 1 Phase DC/DC for Intel CPU

FEATURES

- Single phase CRC DC/DC controller with integrated drivers for CPU core and GFX
- High efficiency, up to 94%; and Integrated boost diodes
- Platform-adjustable operating frequency, V_{BOOT} voltage, maximum temperature, slew rate, SKIP/NAS mode through high speed I^2C port
- 0.8% output voltage accuracy
- 3V to 25V input voltage; 8-bit VID code DAC
- Output voltage slew rate controlled at start-up, shutdown, and during VID changes
- Protection includes: latched over-voltage, embedded thermal, and cycle-by-cycle over-current
- Smart pulse skipping feature and non-audio skipping (NAS) under light load conditions
- User-adjustable load line slope for each rail

GENERAL DESCRIPTION

OZ8296 is a single phase, highly integrated DC/DC controller with integrated drivers for the core and GFX rails. It supports all required IMVP-7/VR12 functions. The powerful embedded drivers allow single phase operation, minimizing solution parts count, cost and PCB area.

OZ8296 features patented CRC architecture which provides superior static and dynamic CORE voltage regulation. A precision reference, remote sensing and CRC architecture assure high output accuracy for all loads and input/output voltages.

APPLICATIONS

- Notebook CPU Core and GFX Power Supplies

APPLICATION DIAGRAM

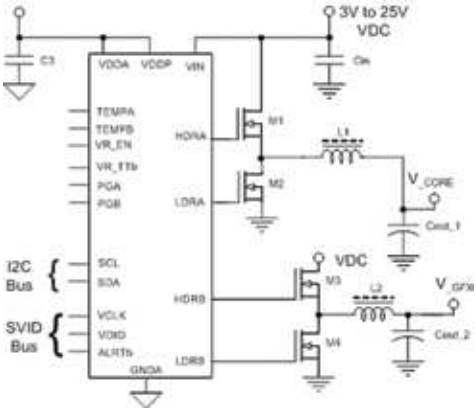

U.S. Patent #'s 6,844,710; 6,965,221; 7,098,642; 7,202,650; 7,466,113; 7,598,718; 7,816,896; and more patents pending.

OZ8293

2 + 1 Phase DC/DC for Intel CPU

FEATURES

- *Dual phase* CRC DC/DC controller with integrated drivers for CPU core; and *Single phase* CRC DC/DC controller with integrated drivers for GFX
- High efficiency, up to 94%; and Integrated boost diodes
- Platform-adjustable operating frequency, V_{BOOT} voltage, maximum temperature, maximum load current, slew rate, SKIP/NAS mode through high speed I^2C port
- Rail A phase configuration through I^2C or power-on strap option on SCL
- 5V to 25V input voltage; 8-bit VID code DAC
- Output voltage slew rate controlled at start-up, shutdown, and during VID changes
- Protection includes: latched over-voltage, embedded thermal, and cycle-by-cycle over-current
- Smart pulse skipping feature and non-audio skipping (NAS) under light load conditions
- User-adjustable load line slope for each rail

GENERAL DESCRIPTION

OZ8296 is a highly integrated DC/DC controller with integrated drivers for the core (dual phase) and GFX (single phase) rails. It supports all required IMVP-7/ VR12 functions. Both output voltages can be programmed through a high speed serial bus.

OZ8293 features patented CRC architecture which provides superior static and dynamic CORE voltage regulation. A precision reference, remote sensing and CRC architecture assure high output accuracy for all loads and input/output voltages.

APPLICATIONS

- Notebook CPU Core and GFX Power Supplies

APPLICATION DIAGRAM

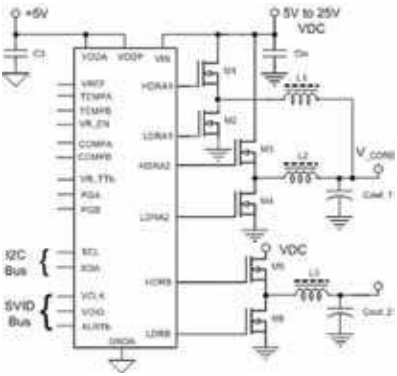

U.S. Patent #'s 6,844,710; 6,965,221; 7,098,642; 7,202,650; 7,466,113; 7,598,718; 7,816,896; and more patents pending.

OZ8321
2 + 1 Phase DC/DC for AMD CPU

FEATURES

- *Dual phase* CRC DC/DC controller with integrated drivers for core power; and *Single phase* CRC DC/DC controller with integrated drivers for North Bridge (NB) power
- High efficiency, up to 94%; and Integrated boost diodes
- Platform-adjustable operating frequency, maximum temperature, over-current protection, slew rate, initial load line slope, initial offset, NAS/SKIP mode through high speed I^2C port
- Rail A phase 2 power-on strap option on BSTA2
- 0.8% output voltage accuracy; and 5V to 25V input voltage
- 8-bit VID code DAC
- Output voltage slew rate controlled at start-up, shutdown, and VID-on-the-fly (VOTF)
- Protection includes: latched over/under-voltage, embedded thermal, and cycle-by-cycle over-current
- Smart pulse skipping feature and non-audio skipping (NAS) under light load conditions
- Low bias differential output voltage remote sensing

GENERAL DESCRIPTION

OZ8321 is a highly integrated DC/DC controller for the core (dual phase) and NB (single phase) rails. It supports all required SV12 functions. Both output voltages are programmed through a high speed serial bus.

OZ8321 features patented CRC architecture which provides superior static and dynamic CORE voltage regulation. A precision reference, remote sensing and CRC architecture assure high output accuracy for all loads and input/output voltages.

APPLICATIONS

- AMD Notebook CPU Core and NB Power Supplies

APPLICATION DIAGRAM

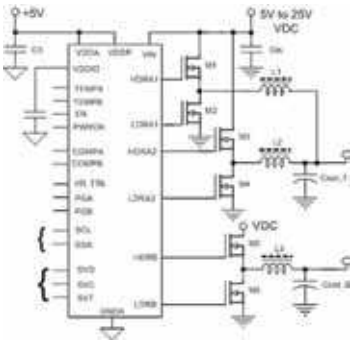

U.S. Patent #'s 6,844,710; 6,965,221; 7,098,642; 7,202,650; 7,466,113; 7,598,718; 7,816,896; and more patents pending.

OZ8322

2 + 2 Phase DC/DC for AMD CPU

FEATURES

- *Dual phase* CRC DC/DC controller with integrated drivers for core power; and *Dual phase* CRC DC/DC controller with external drivers for North Bridge (NB) power
- High efficiency, up to 94%; and Integrated boost diode for core rail
- Platform-adjustable operating frequency, maximum temperature, over-current protection, slew rate, initial load line slope, initial offset, NAS/SKIP mode through high speed I^2C port
- 0.8% output voltage accuracy; and 5V to 25V input voltage
- 8-bit VID code DAC
- Output voltage slew rate controlled at start-up, shutdown, and VID-on-the-fly (VOTF)
- Protection includes: latched over/under-voltage, embedded thermal, and cycle-by-cycle over-current
- Smart pulse skipping feature and non-audio skipping (NAS) under light load conditions
- Low bias differential output voltage remote sensing

GENERAL DESCRIPTION

OZ8322 is a highly integrated DC/DC controller for the core and NB rails (companion chip to OZ8002). It supports all required SV12 functions. Both output voltages are programmed through a high speed serial bus.

OZ8322 features patented CRC architecture which provides superior static and dynamic CORE voltage regulation. A precision reference, remote sensing and CRC architecture assure high output accuracy for all loads and input/output voltages.

APPLICATIONS

- AMD Notebook CPU Core and NB Power Supplies

APPLICATION DIAGRAM

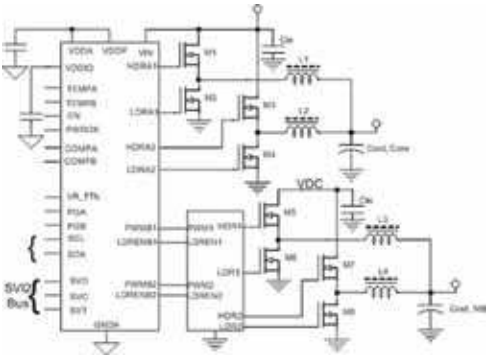

U.S. Patent #'s 6,844,710; 6,965,221; 7,098,642; 7,202,650; 7,466,113; 7,598,718; 7,816,896; and more patents pending.

OZ8002
Dual Channel MOSFET Driver

FEATURES

- Dual channel driver
- Operating voltage up to 35V
- Integrated bootstrap diode
- LDREN signal which can turn off low side MOSFET in light load, guaranteeing higher efficiency
- Internal pull down resistors, at PWM and LDREN pins, to disable channel not connected to controller

GENERAL DESCRIPTION

OZ8002 is a dual channel driver that can be connected to the synchronous buck controller that has no integrated driver. Integrated bootstrap diodes simplify the design and reduce the PCB area.

OZ8002 provides the LDREN signal. Together with the CRC controller (OZ8322, for example) in light load, LDREN low will turn off both the high and low side MOSFETs. This can lead to higher efficiency in light load.

APPLICATIONS

- Notebook and Tablet (where synchronous buck controller, without integrated driver)

APPLICATION DIAGRAM

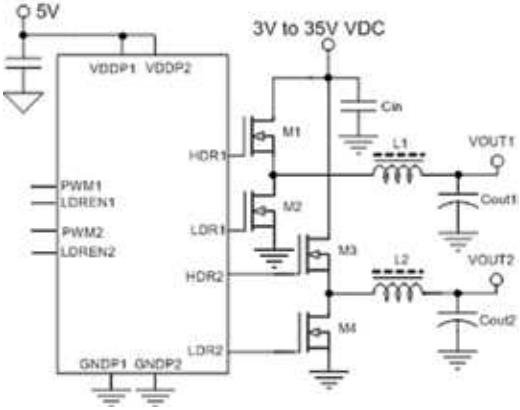

U.S. Patent #7,466,113; and more patents pending.

OZ521
Boost Converter Controller

FEATURES

- Supports wide-range operating voltage
- Integrated with a 50V/2A, power MOSFET
- Supports an optional spread-spectrum switching frequency
- In applications:
  - Supports either constant-voltage or constant-current output
  - Protection includes: output over-voltage, power MOSFET over-current, over-temperature, and open rectifier diode
  - Low standby current

GENERAL DESCRIPTION

OZ521 is a boost converter controller suitable for LED lighting or general purpose DC/DC converter applications. It integrates a 50V/2A MOSFET as the switch and compensation components for the boost converter to optimize the cost/performance of applications.

In applications, the operating frequency is user-selectable.

APPLICATIONS

- LED Lighting
- Tablet
- Cell Phone

APPLICATION DIAGRAM

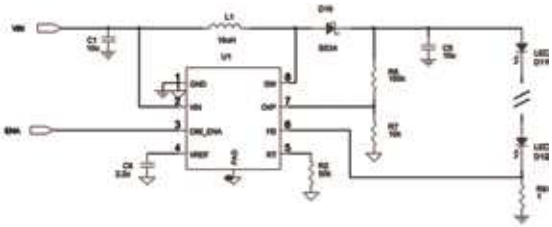

Patents pending.

OZ532
Compact LED Driver

FEATURES

- High efficiency controller for boost converter
- Supports single-cell Li-Ion battery operation
- Drives up to 10 LEDs in series
- Integrated power MOSFET
- Integrated load-disconnection switch
- Supports 100:1 analog dimming ratio
- Self-adaptive operating frequency, optimizing efficiency
- Protection includes: output over-voltage and over-current, LED short circuit to ground, and IC over-temperature
- Output capacitor discharge function in shutdown mode
- Low standby current

GENERAL DESCRIPTION

OZ532 is a controller designed for boost converter LED driver applications. It integrates a power MOSFET and drives single-string LEDs in applications.

OZ532 provides a compact solution to the applications that require minimum components for the boost regulator. It is suitable for portable device applications requiring a single-cell Li-Ion battery.

This IC accepts an external Pulse Width Modulation (PWM) signal to perform dimming control.

APPLICATIONS

- LED Lighting
- Tablet
- Cell Phone

APPLICATION DIAGRAM

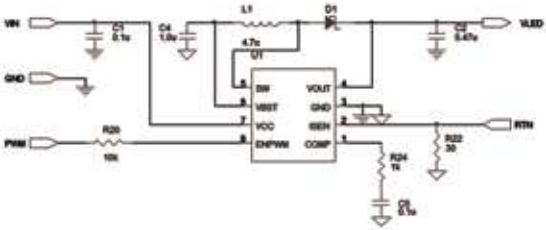

U.S. Patent #7,471,144; and more patents pending.

OZ9956B
Six String LED Controller

FEATURES

- High frequency DC/DC power converter controller
- Drives up to 6 strings in parallel
- Integrated LED current balance control circuit
- Wide input voltage range
- Up to 2.0MHz switching frequency
- External PWM dimming
- Over-voltage and over-current protection
- Soft start function

GENERAL DESCRIPTION

The OZ9956B is a high efficiency, DC/DC controller that drives up to six (6) strings of LEDs in parallel configuration, with multiple LEDs in each string connected in series. It is targeted for notebook/netbook applications.

It provides six (6) LED current sense inputs in an “OR” configuration for improved backlight reliability. This allows the backlight to remain functional in the event that any string (s) is damaged during normal operation.

OZ9956B can receive either an analog signal or an external Pulse Width Modulation (PWM) signal for the dimming control function.

This IC provides an integrated circuit to balance the current flow through each LED string, as well as, the integrated power MOSFET.

APPLICATIONS

- Notebook/Netbook Computer

APPLICATION DIAGRAM

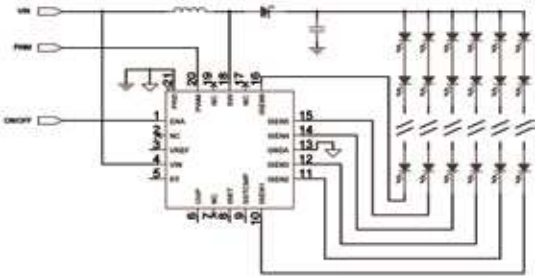

U.S. Patent #’s 7,498,793; 7,847,783; and more patents pending.

OZ9956E
Six String LED Driver Controller

FEATURES

- Highly integrated LED driver controller
- 2.5V – 33V input voltage range
- Drives up to 6 strings of LEDs in parallel
- Up to 30mA current per string
- Built-in LED current balance control circuit
- Integrated power MOSFET
- Built-in 20kHz PWM dimming control eliminates audible noise
- Supports external PWM dimming control
- 100:1 dimming ratio at 20kHz PWM frequency
- Protection: over-voltage, over-current, thermal, and open rectifier diode

GENERAL DESCRIPTION

The OZ9956E is a highly efficient, integrated LED driver controller designed for middle power LCD backlight applications. Featuring a very wide operational input voltage range, it works as a universal solution for applications powered by one or multiple Li-Ion battery cells or those directly powered by an adapter.

It provides six (6) LED current sense inputs in an “OR” configuration for improved backlight reliability. This allows the backlight to remain functional in the event that any string (s) is damaged during normal operation.

OZ9956E accepts external Pulse Width Modulation (PWM) dimming signals to perform either directly controlled external or fixed 20kHz internal dimming function.

APPLICATIONS

- Notebook/Netbook Computer

APPLICATION DIAGRAM

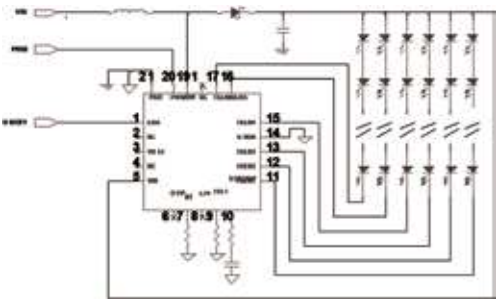

U.S. Patent #’s 7,498,793; 7,847,783; and more patents pending.

OZ9960
High Power LED Controller

FEATURES

- High frequency DC/DC boost converter controller
- Integrated power MOSFET
- Supports low input voltage
- Up to 200mA LED current
- External PWM dimming
- Open LED protection
- MOSFET over-current protection
- Soft start function

GENERAL DESCRIPTION

OZ9960 is a high efficiency DC/DC boost converter controller that drives a string of LEDs connected in a serial configuration. It is ideal for small and mid-size LCD backlight applications.

OZ9960 supports a wide input range and constant, user-defined operating frequency for a single string LED application. It receives an external Pulse Width Modulation (PWM) signal for dimming control.

APPLICATIONS

- Notebook/Netbook Computer
- GPS
- PND (Personal Navigation Device)

APPLICATION DIAGRAM

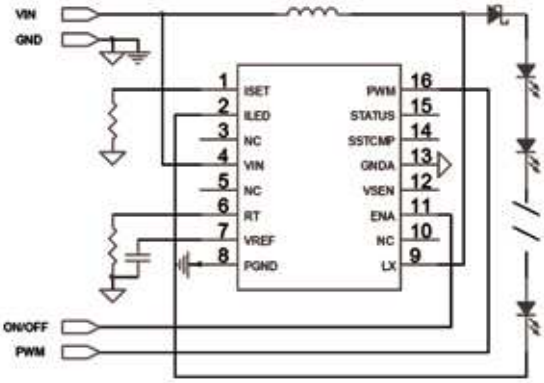

Patents pending.

OZ9979

Six String LED Controller with Phase-Shift Dimming, Internal MOSFET

FEATURES

- High efficiency DC/DC boost converter controller
- Integrated power MOSFET, and LED current balance control circuit
- Drives up to 6 strings in parallel
- Supports external, internal PWM and analog dimming
- Enhanced dimming resolution
- Supports 6 equal-delay PWM dimming signals
- PWM dimming frequency synchronized with external signal
- Protection includes: MOSFET over-current, over-voltage, LED short circuit detection, output short circuit/open diode, and thermal
- Soft start function

GENERAL DESCRIPTION

OZ9979 is a high efficiency, DC/DC controller that drives up to six strings of LEDs connected in parallel configuration; with multiple LEDs in each string connected in series. It is targeted for notebook backlight applications.

The IC provides six (6) LED current sense inputs in an “OR” configuration for improved backlight reliability. This allows the backlight to remain functioning in the event that any string (s) is damaged during normal operation.

APPLICATIONS

- Notebook Computer

APPLICATION DIAGRAM

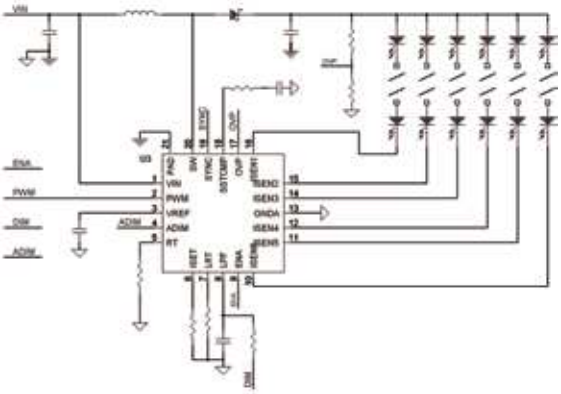

U.S. Patent #’s 7,498,793; 7,847,783; and more patents pending.

OZ9993
Low Cost White LED Controller

FEATURES

- High frequency DC/DC boost converter controller
- Supports a single cell Li-Ion battery
- Fixed 975kHz switching frequency
- Integrated power MOSFET with over-current protection
- Output over-voltage protection
- Open diode or output short circuit protection
- Thermal protection

GENERAL DESCRIPTION

OZ9993 is a high efficiency, DC/DC controller with an integrated power MOSFET that drives one string of LEDs. It provides the user with a low cost solution that requires minimum components for the boost regulator and is suitable for applications requiring a single cell Li-Ion battery.

A soft start feature is provided to minimize in-rush current during start-up.

APPLICATIONS

- Netbook Computer
- PND
- Camcorder

APPLICATION DIAGRAM

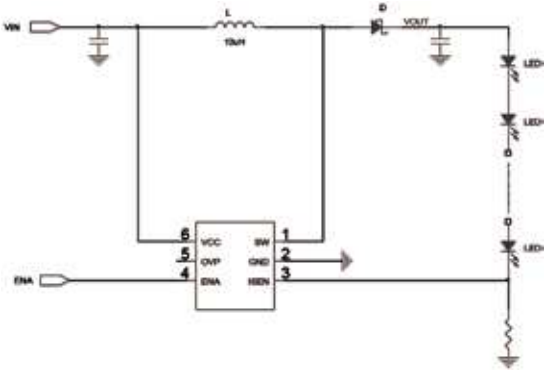

U.S. Patent #'s 7,498,793; 7,847,783; and more patents pending.

OZ523
Step Down DC/DC Converter

FEATURES

- Supports constant voltage or constant current
- 1.5A continuous output current
- 0.25Ω internal Power MOSFET
- Stable control loop
- V_{OUT} from 0.8V to 0.9*V_{IN}
- Soft start function
- Fixed switching frequency
- Low current shutdown mode
- Over-current and thermal protection

GENERAL DESCRIPTION

The OZ523 is a fast response PWM controller using minimum external components to achieve control loop stability in DC/DC and LED driver applications. It supports both constant voltage and constant current applications.

OZ523 is a non-synchronous step down DC/DC converter with a 0.25Ω integrated MOSFET and supports a 1.5A continuous load current with up to 3.2A peak current. The output voltage can be user-defined from 0.8V up to 0.9*V_{IN} using a feedback resistor divider.

OZ523 can also operate in constant current mode to drive high power LED applications.

APPLICATIONS

- General Purpose DC/DC Converter

APPLICATION DIAGRAM

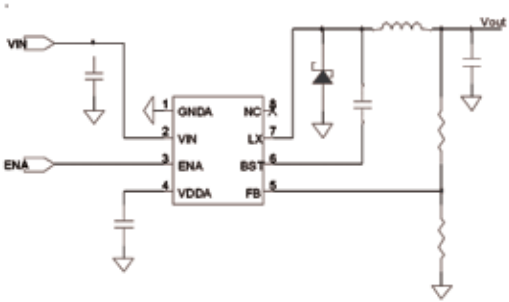

Patents pending.

OZ524
Step Down 3A DC/DC Converter

FEATURES

- Supports constant voltage or constant current
- 3.0A continuous output current
- 0.15Ω internal Power MOSFET
- Stable control loop
- V_{OUT} from 0.8V to 0.9*V_{IN}
- Soft start function
- Fixed switching frequency
- Low current shutdown mode
- Over-current and thermal protection

GENERAL DESCRIPTION

The OZ524 is a fast response PWM controller using minimum external components to achieve control loop stability in DC/DC and LED driver applications. It supports both constant voltage and constant current applications.

OZ524 is a non-synchronous step down DC/DC converter with a 0.25Ω integrated MOSFET and supports a 3.0A continuous load current with up to 3.2A peak current. The output voltage can be user-defined from 0.8V up to 0.9*V_{IN} using a feedback resistor divider.

OZ524 can also operate in constant current mode to drive high power LED applications.

APPLICATIONS

- General Purpose DC/DC Converter

APPLICATION DIAGRAM

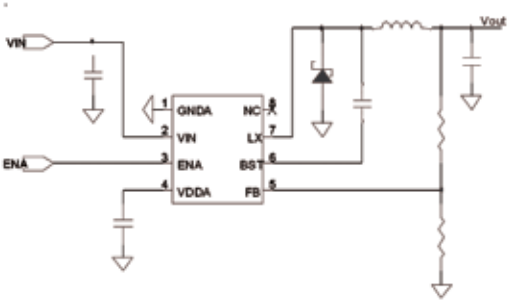

Patents pending.

OZ526
White LED Controller

FEATURES

- High frequency DC/DC power converter for LEDs
- Integrated power MOSFET
- Integrated LED current balance control circuit
- User-defined operation frequency
- Drives 1 or 2 strings
- External PWM and Analog dimming control
- Converter output over-voltage protection
- Internal power MOSFET over-current protection
- Over-current protection for each string
- Output short circuit detection
- Open diode and thermal protection

GENERAL DESCRIPTION

The OZ526 is a high efficiency DC/DC controller with an integrated power MOSFET that drives one string or two LED strings in parallel configuration, with multiple LEDs connected in series. It is targeted for netbook and PND (Personal Navigation Device) backlight applications.

OZ526 provides two LED current sense inputs in an “OR” configuration for improved backlight reliability. This allows the backlight to remain functioning in the event that any string(s) is damaged during normal operation. The controller receives an external Pulse Width Modulation (PWM) signal for the dimming control function.

APPLICATIONS

- GPS
- PND

APPLICATION DIAGRAM

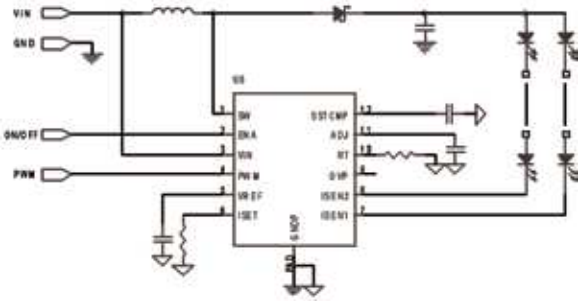

U.S. Patent #’s 7,498,793; 7,847,783; and more patents pending.

OZ527
Automotive GPS LED Controller

FEATURES

- High power DC/DC power converter
- Integrated Power N-Channel MOSFET
- Integrated LED current balance control circuit
- Drives up to 6 strings in parallel
- User-defined string selection
- Time-shift PWM phase dimming control for low audible noise
- Operation frequency synchronization
- LED open string protection
- Output short circuit or open diode protection
- LED short circuit protection
- MOSFET over-current protection
- Shutdown under abnormal condition protection
- Thermal protection
- LED fault status output

GENERAL DESCRIPTION

The OZ527 is a high efficiency DC/DC controller that drives up to six strings connected in parallel configuration with multiple LEDs in each string connected in series.

OZ527 provides 6 LED current sense inputs in an “OR” configuration to improve backlight reliability. This allows the backlight to remain functioning in the event that a string(s) is damaged during normal operation.

OZ527 supports external Pulse Width Modulation (PWM) dimming control.

APPLICATIONS

- GPS

APPLICATION DIAGRAM

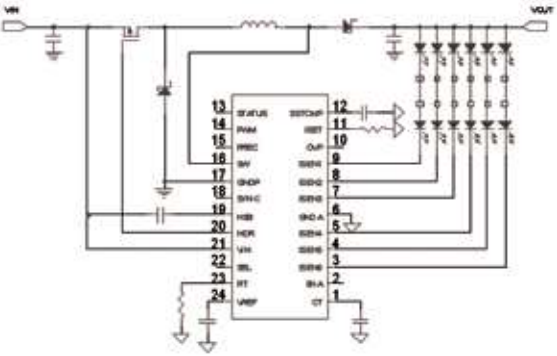

U.S. Patent #’s 7,498,793; 7,847,783; and more patents pending.

OZ528
LCD Bias Supply Controller

FEATURES

- High power DC/DC power converter
- Operation frequency synchronization
- Optional spread spectrum operation frequency
- Thermal, over-current, and over load protection
- Abnormal pulled-up output protection
- LED fault status output

Buck Converter

- Integrated power MOSFET
- Current mode control
- Soft start function

Two Independent Boost Converters

- Integrated power MOSFET
- Current mode control
- Wide output range: up to 25.0V
- Adjustable power on/off delay time
- Soft start function

Negative Charge Pump

- Voltage mode control
- Adjustable power on/off delay time

GENERAL DESCRIPTION

The OZ528 is a LCD panel bias power supply controller, suitable for GPS application. It generates four voltage rails for a TFT LCD panel. It includes a boost converter to provide the source voltage, buck converter to provide the logic voltage for the system, boost converter for positive gate voltage and a negative charge-pump driver to provide adjustable regulated output voltages to bias the TFT panel.

OZ528 has power-on sequencing. The buck converter is the first to start after the IC is enabled. Two boost converters and a negative charge-pump are enabled when their corresponding TIMER reaches approximately 2.0V.

APPLICATIONS

- GPS

APPLICATION DIAGRAM

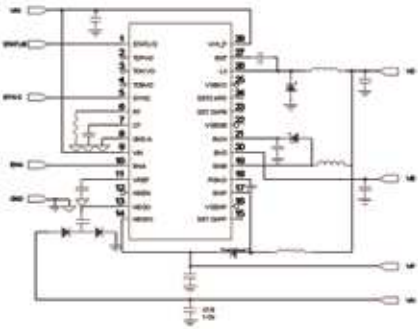

Patents pending.

OZ9961
Six String LED Controller

FEATURES

- High frequency DC/DC power converter controller
- Drives 6 LED strings in parallel
- Integrated LED current balance control circuit
- Up to 2.35MHz switching frequency
- Analog or external PWM or internal LPWM dimming control
- Over-current and over-voltage protection
- Thermal protection
- Open diode and open/short circuit protection
- Soft start function

GENERAL DESCRIPTION

The OZ9961 is a LED controller that drives up to six (6) strings of LEDs in parallel configuration, with multiple LEDs per string connected in series. It provides six (6) LED current sense inputs in an “OR” configuration to improve backlight reliability. This allows the backlight to remain functioning in the event that any string (s) is damaged during normal operation.

OZ9961 supports either analog, external Pulse Width Modulation (PWM) or internal Low frequency PWM (LPWM) dimming control.

APPLICATIONS

- LCD Monitor
- GPS

APPLICATION DIAGRAM

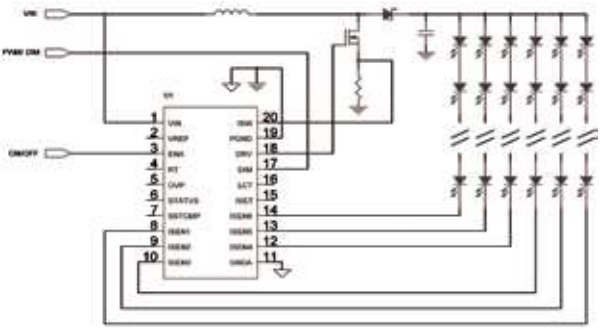

U.S. Patent #’s 7,498,793; 7,847,783; and more patents pending.

OZ9965
LED Controller + 2 – DC/DC

FEATURES

- Integrated LED controller and two (2) DC/DC converters
- User-defined operation frequency
- Wide input voltage range
- Thermal protection
- User-defined shutdown delay time
- LED fault status output

LED Controller

- User-defined boost topology or buck- boost topology
- Current mode control
- Drives up to 4 strings of LEDs in parallel
- User-defined string selection
- Integrated LED current balance control circuit
- External PWM dimming control
- LED open string and short circuit protection

LED Controller (cont.)

- MOSFET over-current protection
- Over load protection
- Output short circuit or open diode protection

Boost Converter

- Current mode control
- Over-voltage protection
- MOSFET over-current protection
- Over load protection
- Soft start function

General Purpose Converter

- User-defined negative buck-boost or buck topology
- Voltage mode control
- Over-voltage and over-load protection
- Soft start function

GENERAL DESCRIPTION

The OZ9965 is a wide input range, multi-output, power management controller for small panel LCD applications. It controls the DC/DC power conversion from a single input supply voltage to provide the power needed to drive an LED back-light module, source drivers and gate drivers used in a LCD application.

OZ9965 includes a high power LED driver controller, a boost converter, and one general purpose converter that can be configured into either a buck or negative buck-boost converter.

APPLICATIONS

- Car TV
- GPS

APPLICATION DIAGRAM

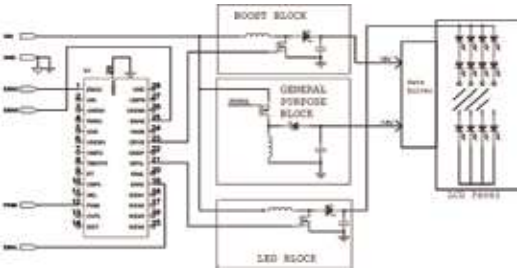

U.S. Patent #7,847,783; and more patents pending.

OZ9990

Four String, High Power, Buck/Boost LED Driver

FEATURES

- High power DC/DC power converter controller
- Drives up to 4 strings in parallel
- Integrated LED current balance control circuit
- User-defined string selection
- Operation frequency synchronization
- External PWM dimming control
- Time-shift PWM phase dimming control for low audible noise
- LED open string protection
- Output short circuit and open diode protection
- LED short circuit protection
- MOSFET over-current protection
- Thermal protection
- LED fault status output
- Soft start function

GENERAL DESCRIPTION

OZ9990 is a LED controller that drives up to four (4) strings connected in parallel configuration, with multiple LEDs per string connected in series. It provides four (4) LED current sense inputs in an “OR” configuration to improve backlight reliability. This allows the backlight to remain functioning in the event that any string (s) is damaged during normal operation.

OZ9990 supports external Pulse Width Modulation (PWM) dimming control, and provides an integrated circuit to balance the current flow through each LED string.

APPLICATIONS

- Car TV
- GPS

APPLICATION DIAGRAM

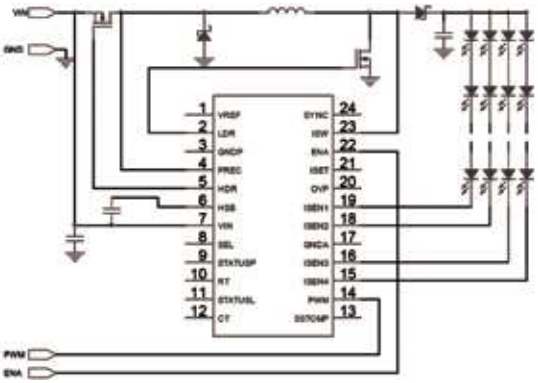

U.S. Patent #’s 7,498,793; 7,847,783; and more patents pending.

OZ9998A
Eight String, High Power LED Controller

FEATURES

- High power DC/DC boost converter controller
- Drives up to 8 strings in parallel
- Integrated LED current balance control circuit
- User-defined string selection
- External PWM dimming control
- Time-shift PWM phase dimming control for low audible noise
- Multi-chip parallel operation for more than 8 LED strings
- MOSFET over-current protection
- LED short circuit and open string protection
- Thermal protection
- LED fault status output

GENERAL DESCRIPTION

OZ9998A is a high efficiency, DC/DC controller that drives up to eight (8) strings of LEDs connected in parallel configuration, with multiple LEDs in each string connected in series. It provides eight (8) LED current sense inputs in an “OR” configuration to improve backlight reliability. This allows the backlight to remain functioning in the event that any string (s) is damaged during normal operation.

OZ9998A supports external Pulse Width Modulation (PWM) dimming control. Plus, it provides an integrated circuit to balance the current flow through each LED string.

APPLICATIONS

- LCD Monitor
- LCD TV

APPLICATION DIAGRAM

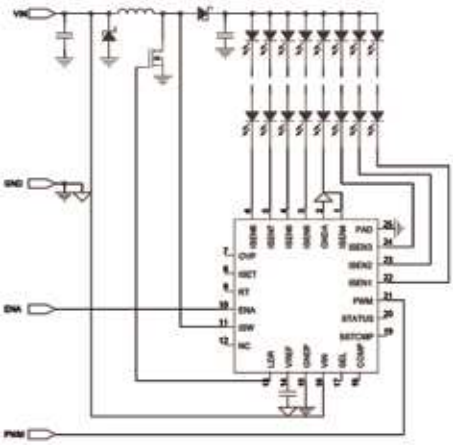

U.S. Patent #’s 7,498,793; 7,847,783; and more patents pending.

Company Background

Founded in April 1995, O_2Micro® International Limited (NASDAQ: OIIM) designs, develops and markets innovative ***power management*** and ***e-commerce*** components for the Computer, Consumer, Industrial/Automotive, and Communications markets.

O_2Micro maintains an extensive portfolio of intellectual property, and has numerous Trademark Applications and Copyright Registrations.

The company's extensive list of customers includes many of the world's leading electronics manufacturers.

For additional information, including sales office locations, please visit the O_2Micro web site at **www.o2micro.com**.

Copyright © 2012-13 by O_2Micro. All rights reserved.
PO_2WER, the O_2Micro logo, O_2Micro, Cool Charge, Constant-Ripple-Current, and combinations thereof are registered trademarks of O_2Micro.
All other trademarks are the property of their respective owners. R-101212

O2 Micro®
Breathing Life into Mobility

O2 Micro®
Breathing Life into Mobility
www.o2micro.com