TELEFUNKEN electronic
Creative Technologies

U 2148 B-FP

TELEFUNKEN ELECTRONIC

Broadband compander circuit for FM radio telephony transceiver noise reduction

T-73-43

Technology: Bipolar

Features:

- One compressor channel
- One expander channel
- Two additional operational amplifiers for optional use
- One analog switch
- CMOS compatible power down input
- Very low noise switching
- Single supply voltage from 4.75 V
- Independent regulation of rise and fall times

Case: SO 24

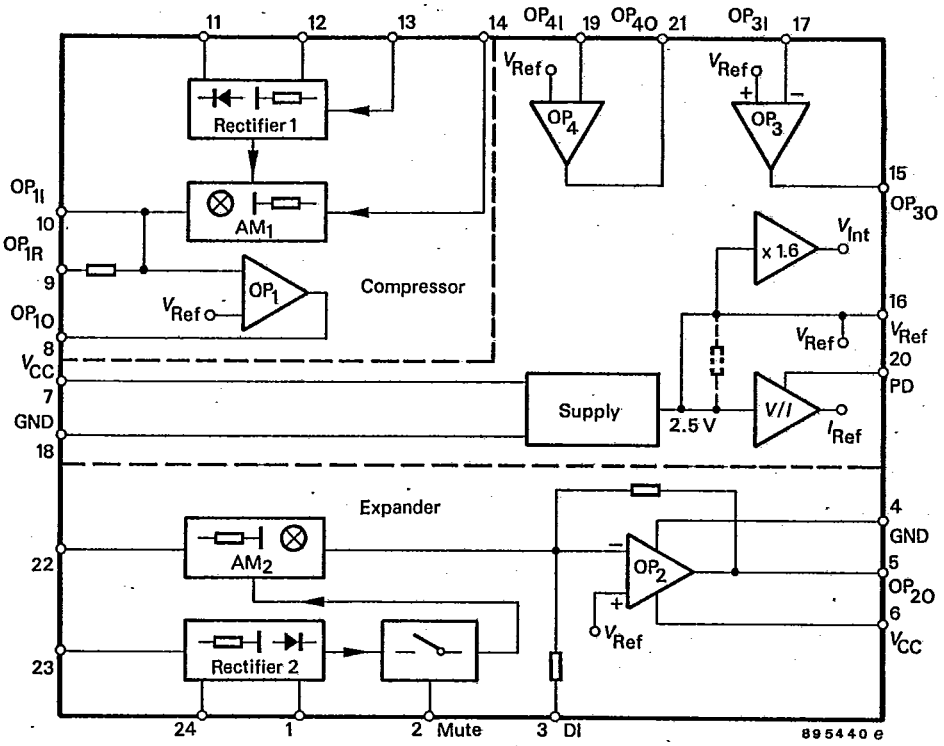

Fig. 1: Block diagram

T1.2/1442.0490

U 2148 B–FP

T-73-43

Pin description

Pin 1	t_1	Expander-fall time constant regulated via external capacitor
Pin 2	Mute	CMOS compatible input Mute-Low, expander is switched on Mute-High, expander is switched off Signals at Pin 22, 23 (expander inputs) are muted at outputs (Pin 5) whereas signal at Pin 3 is also available at Pin 5.
Pin 3	DI	Data input It has a gain factor of 1 Mute-High, signal at Pin 3 is also available at Pin 5 (output) Mute-Low, output signal at Pin 5 is a sum of signal data output and audio signal at expander
Pin 4, 18	GND	Ground
Pin 5	OP_{2O}	Operational amplifier output – expander
Pin 6, 7	V_{CC}	Supply voltage
Pin 8	OP_{1O}	Operational amplifier output – compressor
Pin 9	OP_{1R}	Operational amplifier input – compressor
Pin 10	OP_{1I}	Operational amplifier inverted input Control for frequency dependent compressor amplification limitation. Noise suppression by low frequencies and regulated mid voltage output.
Pin 11	t_{11}	Compressor – fall time constant regulated via external capacitor
Pin 12	t_{12}	Compressor – rise time constant regulated via external capacitor
Pin 13	I_{13}	Rectifier input 1 for level detection compressor
Pin 14	I_{14}	Transconductance amplifier input 1 of compressor. It multiplies the input signal with average signal level: Input resistance $R_{14} = 15$ kΩ
Pin 15	OP_{3O}	Operational amplifier output 3
Pin 16	V_{Ref}	Reference voltage for internal use
Pin 17	OP_{3I}	Operational amplifier inverted input 3 It is frequency compensated $G_V \geqq 40$ dB. If this amplifier is used for microphone amplifier, V_{Ref} must be suppressed externally.
Pin 19	OP_{4I}	Operational amplifier inverted input 4 It is frequency compensated internally for $G_V = 0$ dB
Pin 20	PD	Power down input CMOS compatible PD-High: Normal operation of the IC PD-Low: Stand by operation and reduction of current consumption Very low noise switching

Pin 21	OP_{40}	Operational amplifier output 4
Pin 22	I_{22}	Transconductance amplifier input 2. It multiplies the input signal with average signal level: Input resistance $R_{22} = 15\ k\Omega$
Pin 23	I_{23}	Rectifier input 2 for level detection of expander
Pin 24	t_{24}	Expander-rise time constant, regulated via external capacitor

Absolute maximum ratings

Reference point Pin 4, unless otherwise specified

Supply voltage	Pin 6,7	V_{CC}	14	V
Ambient temperature range		T_{amb}	−25...+ 85	°C
Storage temperature range		T_{stg}	−55...+125	°C
Power dissipation, $T_{amb} = 25\,°C$		P_{tot}	300	mW
Junction temperature		T_j	125	°C

Maximum thermal resistance

Junction ambient		R_{thJA}	120	K/W

Electrical characteristics

Test circuit see Fig. 3, $V_{CC} = 5\,V$, $T_{amb} = 25\,°C$, f = 1 kHz, reference point pin 4, 18

$V_{(Mute)}$ = LOW Expander output is not muted
V_{PD} = HIGH IC is not in PD-mode
V_{DI} = 0 V No signal on data input

			Min.	Typ.	Max.	
Supply voltage range	Pin 6,7	V_{CC}	4.75	5	12	V
Supply currents:						
input open		I_{CC}		5	7	mA
PD = LOW, input open		I_{CC}		600	700	µA
Reference voltage	Pin 16	V_{Ref}	2.35	2.5	2.65	V
CMOS-compatible inputs						
HIGH voltage		V_{IH}	4.5			V
LOW voltage		V_{IL}			0.5	V
Input currents						
$V_{IH} = 5\,V$		I_{IH}		70	100	µA
$V_{IL} = 0\,V$		I_{IL}	±1		±1	µA
Compressor-Expander						
Input level of operational amplifier at 0 dB		V_I	−1	0	+1	dB
Channel selection		CS	50			dB
Rise time		t_r	0.9		8	ms
Ratio of rise and fall time		$\frac{t_r}{t_f}$	1		10	
Distortion, $V_I = 0\,dBm$		d			2	%

			Min.	Typ.	Max.	
Compressor						
Max. input level						
$V_{CC} = 4\,V$		V_I		−6	−5	dBm
$V_{CC} = 5\,V$		V_I		0	+1	dBm
Gain	Pin 8					
$V_9 =$ 0 dBm		G_8	−1	0	+1	dB
$V_9 = -40$ dBm		G_8	19	20	21	dB
$V_9 = -80$ dBm		G_8	35	40	45	dB
Max. output current						
$R_L = 750\,\Omega$	Pin 8	I_O		±1	±2	mA
Expander						
Max. input level						
$V_{CC} = 4\,V$		V_I		−3	−2	dBm
$V_{CC} = 5\,V$		V_I		0	+1	dBm
Gain	Pin 5					
V = 0 dBm		G_5	−1	0	+1	dB
V = 20 dBm see test circuit		G_5	−21	−20	−19	dB
V = 40 dBm		G_5	−45	−40	−35	dB
Output noise no signal, f = 300 Hz...3.4 kHz		n_O			−90	dBm
Mute $V_I = 0$ dBm, $V_{(Mute)}$ = High		ASP	−60			dB
Output current $R_L = 25\,\Omega$		I_O			±60	mA
Gain on DI		G		0		dB
OP 3						
Max. output level $V_{CC} = 5\,V$	Pin 15	V_O			+1	dBm
Output current	Pin 15	I_O			±2	mA
Gain adjustment		G_O	40			dB
Open loop gain		G		100		dB
Input noise voltage density		$n_{(v)}$			40	$nV/\sqrt{Hz}$
Input noise current density		$n_{(i)}$			0.5	$pA/\sqrt{Hz}$
Diff. input resistance		r_i	200			kΩ

			Min.	Typ.	Max.	
OP 4						
Max. output level $V_{CC}=5\,V$	Pin 21	V_l				+1 dBm
Max. output current	Pin 21	I_o			±2	mA
Gain adjustment	Pin 21	G	0			dB
Open loop gain	Pin 21	G		100		dB
Diff. input resistance	Pin 21	r_i	200			kΩ

Rise and fall times, t_r, t_f

Independent regulation of rise and fall times is possible. Compander (compressor and expander) circuit is time constant dependent. Compressor and expander can be regulated with capacitors on the specified pins whereas the appropriate internal resistive values are input amplitude (level) dependent.

$$t_r = R_r \cdot C_r$$
$$t_f = R_f \cdot C_f$$
whereas $(C_r \leqq C_f)$

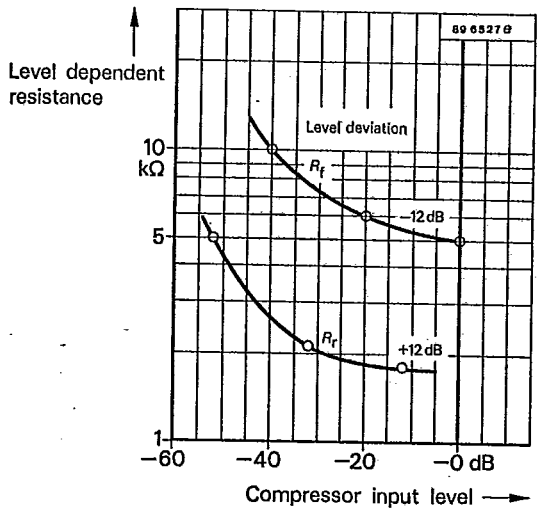

Fig. 2

When capacitor values for the expander and the compressor are the same $(C_r = C_f)$, the successive expander compensates the input voltage of the compressor gain.

U 2148 B-FP

T-73-43

Application

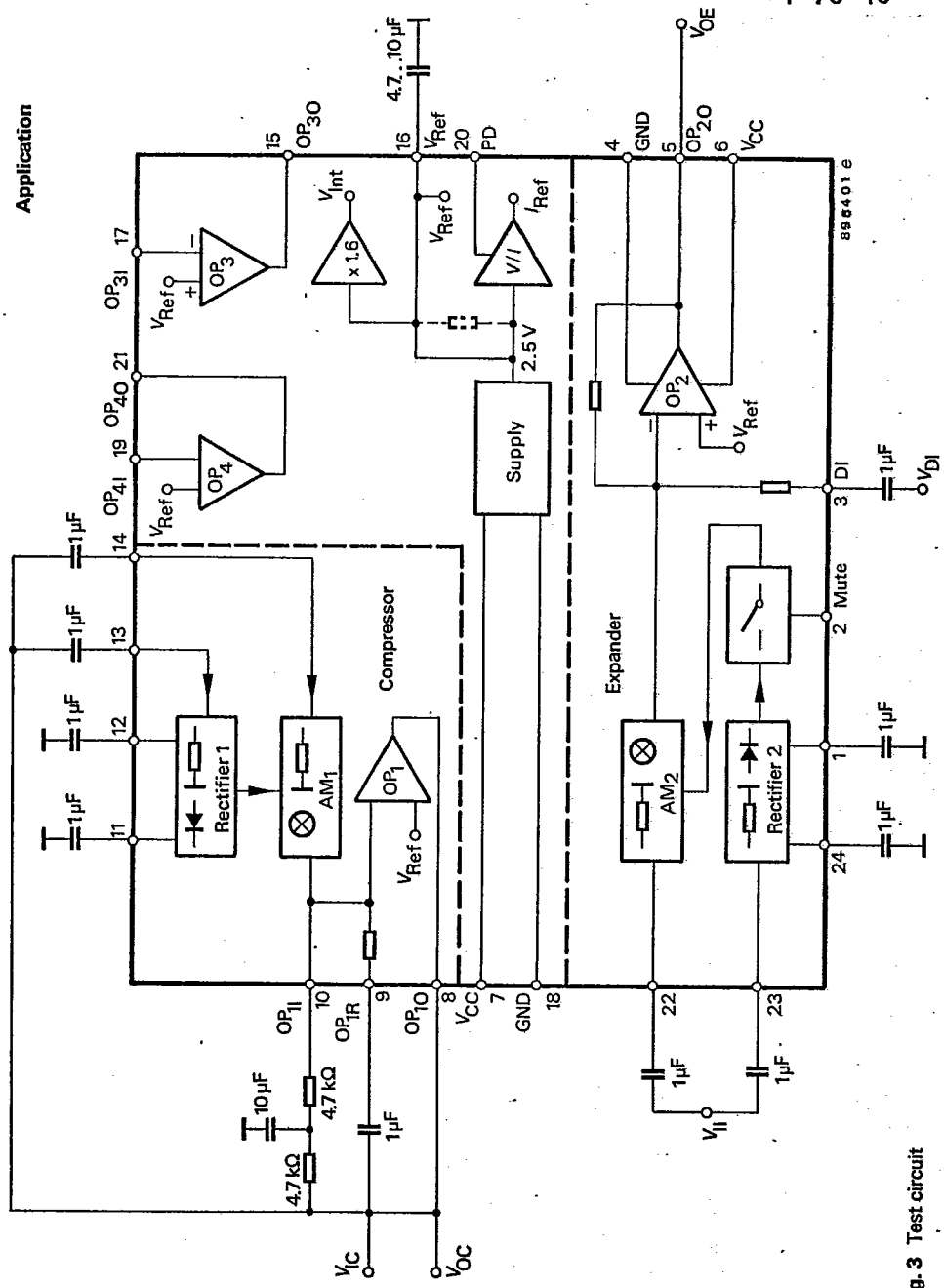

Fig. 3 Test circuit

TELEFUNKEN ELECTRONIC

U 2148 B-FP

T-73-43

Dimensions in mm

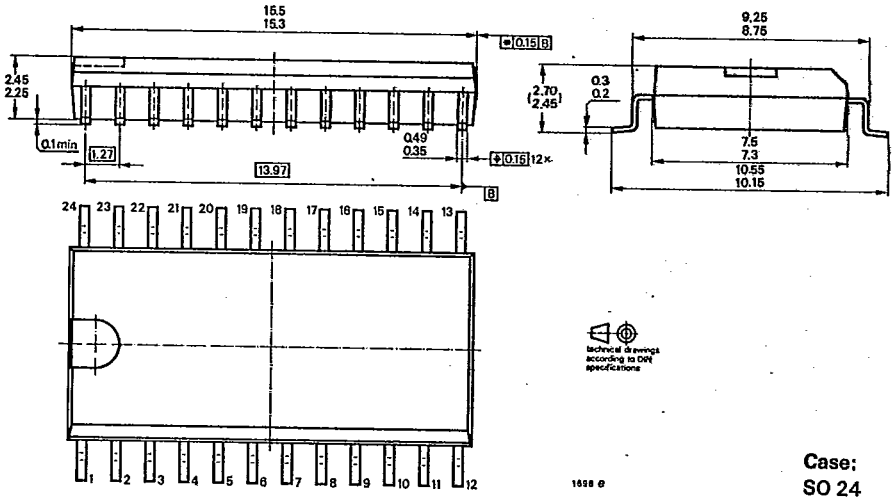

Case:
SO 24